Plasma & Reactive Gas Solutions

WWW.MKSINST.COM

LIQUOZON® *Ultra*

OZONATED DI WATER SYSTEM
SAFE, EFFICIENT DI WATER LOOP AND STORAGE TANK SANITIZATION WITH OZONE

The LIQUOZON® *Ultra* ozonated DI water unit is an automated ozone injection system used for the sanitization of process water systems, storage tanks and distribution lines. The LIQUOZON *Ultra* system provides a clean, safe and efficient alternative to chemical water treatment systems enabling you to minimize your operating costs and maximize uptime.

LIQUOZON *Ultra* systems use the highly reliable, production proven SEMOZON® ozone generators, a standard in high technology for over 15 years.

Ozone is produced via a silent discharge and is injected into the process water. The ozone-enriched water is then degassed to remove any bubbles and delivered either into the storage tank or directly into the process loop. Ozone is readily neutralized into benign components through heat. An optional UV Ozone Destruct can be installed to photo-dissociate the ozone, destroying it before it enters your main water stream. With onboard instrumentation and control, the LIQUOZON *Ultra* system delivers all the necessary data logging required for process validation. It can be programmed to automatically sanitize your system on a predetermined schedule or it can be operated continuously for TOC and bacterial reduction without the need for additional periodic sanitization. The LIQUOZON *Ultra* system is skid-mounted, self-contained, completely pre-piped and thoroughly factory tested to reduce installation time.

Features & Benefits

- Ozone is an environmentally friendly chemical which converts back to benign O_2 eliminating hazardous chemical disposal
- Ozone is generated at point of use, no storage or transportation is required
- Ozone has a higher redox potential than traditional chemicals reducing sanitization time and frequency, increasing uptime
- Fewer, shorter rinses save water and lower cost of ownership
- Flows of 10 - 30 gpm and higher with dissolved ozone concentrations of 20 - 2000ppb to meet existing water system requirements and future needs
- Integrated and fully tested skid with minimum connections for fast, easy install and quick start up
- Integrated oxygen generator eliminates the cost and complexity of plumbing into facility gas lines
- On board PLC controller with touch screen user interface provides easy, central controls for ozone dosing, safety monitoring, and oxygen generator
- Controller can be integrated into factory management and data storage systems allowing data collection for validation

The Power of Ozone

Ozone is the strongest commercially available oxidizing agent for use in water treatment today.

- Ozone sanitization will reduce operating cost and improve uptime
- Ozone does not require rinsing for chemical residue removal
- Ozone is a very effective sanitant with cell destruction kinetics orders of magnitude higher than chlorine
- Ozone is a green chemical that decays to oxygen ($2\ O_3 \Rightarrow 3\ O_2$)
- In addition to destroying living micro-organisms, Ozone reduces TOC and endotoxins

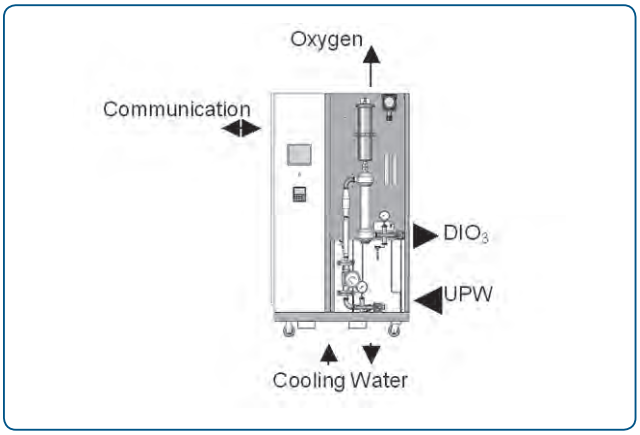

Figure 1 —
System facility diagram

Figure 2 —
LIQUOZON® *Ultra UV*

Process Description

Continuous Ozonation

Continuous storage tank ozonation to a concentration of 20-50 ppb will prevent TOC build up and contamination of your high purity water, yielding <5 ppb TOC and <5 cfu/100 ml in ambient temperature water systems. By diverting a partial flow of your pure water to the LIQUOZON® *Ultra* system via a bypass line, the water is treated with ozone to a dissolved concentration between 0.02 - 0.05 mg/l and then returned back to your system in the return line. The UV ozone destruct unit at the beginning of your loop breaks down the ozone to an undetectable level before returning it to your main water stream.

Periodic Ozonation for Sanitization

Very low ozone concentrations in the magnitude of 0.1 to 0.2 mg/l are sufficient to sanitize the distribution loop and keep germ counts below 5 cfu per 100 ml.

With the UV destruct lamp turned off, a partial flow of pure water is taken from the tank via a bypass line and fed into the LIQUOZON® *Ultra*. Ozonated water is returned to the feed line of the loop. The dissolved ozone concentration is between 0.1 and 0.2 mg/l. The ozone concentration at the end of the loop is monitored. Once the concentration reaches the desired dissolved ozone concentration set point, the system is held at this concentration for 5 to15 minutes. At the completion of the sanitization cycle the ozone generator is turned off and the UV destruct unit at the beginning of the loop is turned on to break down the ozone to an undetectable level. Product water can be used again when no more ozone is detected.

Biofilm Removal

Higher ozone dosages (1 ppm) and contact times can be used in pipes and water systems that are ozone compatible to remove biofilms.

Depending on the duration and frequency of the sanitization operations and the quality of the generated pure water, the ozone concentration required for effective biofilm removal, TOC reduction, and periodic sanitization may vary from the quantities listed here.

Dimensional Drawings

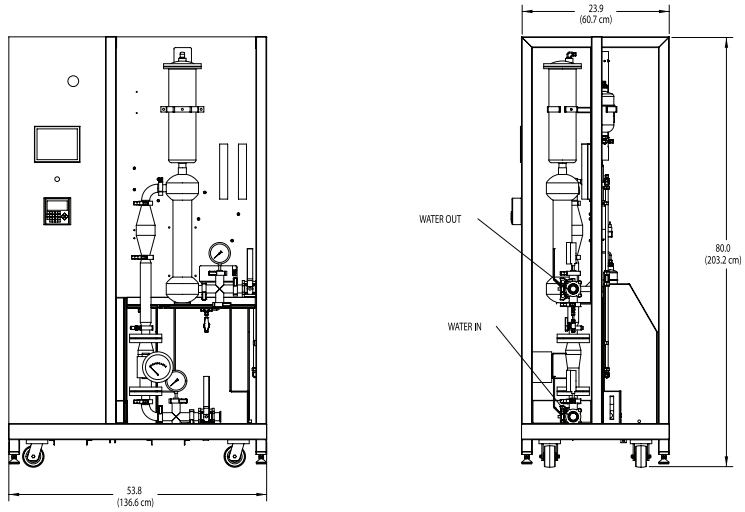

AX8600-01 —
DIO_3 flow rate up to 30 gpm

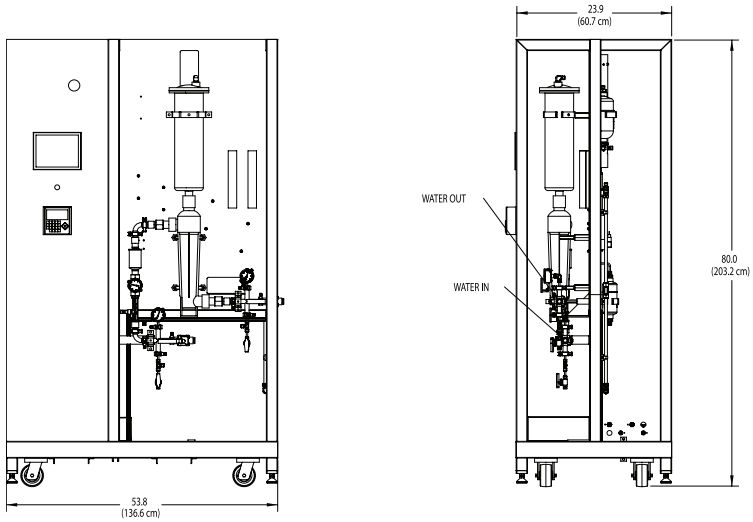

AX8600-02 —
DIO_3 flow rate up to 10 gpm

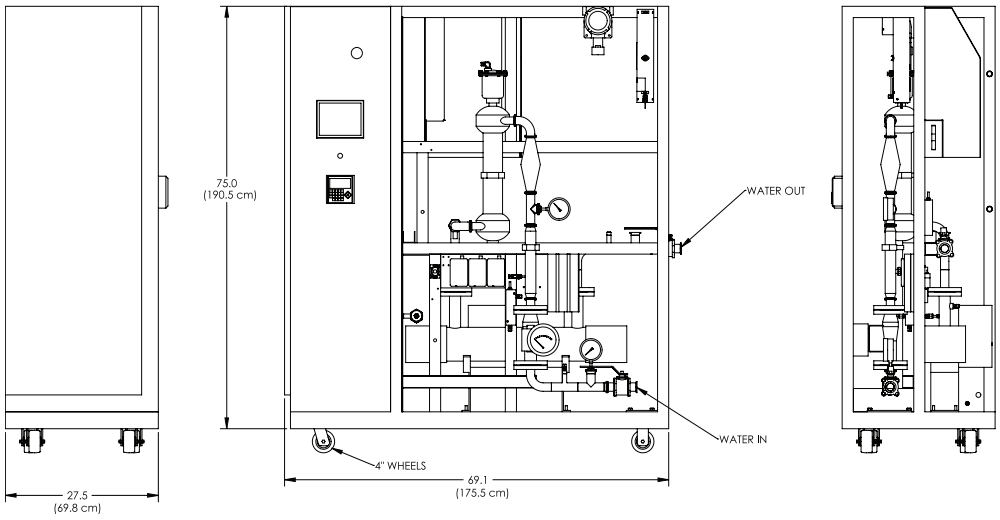

AX8600-03 —
DIO_3 flow rate up to 30 gpm with optional destruct

Dimensional Drawings —
Note: Unless otherwise specified, dimensions are nominal values in inches (centimeters referenced).

Specifications and Ordering Information

LIQUOZON® *Ultra*	AX8600-01 Model	AX8600-02 Model	AX8600-03 Model
DIO_3 Flow Rate	up to 30 gpm	up to 10 gpm	up to 30 gpm
Dissolved Ozone Concentration	50 - 2000 ppb (0.05 to 2 µgrams/Liter)		
Ozone Mixing	Injector, Flash reactor for mixing ozone into the DI water		
Ozone Degas Chamber	Sized to flow rate		
Wetted Materials	316L Stainless Steel, Kynar® & Teflon®		
Mobility/Placement	Skid for easy placement		
Oxygen Concentration	12 SCFH of 95% O_2		
Ozone Off-gas Destruct	High Efficiency heated O_3 destruct catalyst		
Safety Features	Ozone leak detection & interlock equipment shutdown - external relay contacts can be initiated		
Controller Features	Automated dissolved ozone concentration control, Flow measurement, Low oxygen pressure interlock, Ozone leak interlock, High water temperature interlock, Total ozone production hour meter, O_2 Gas flow meter (PSA), O_2 Pressure gauge (PSA) transducer, External relay		
Ozone Generator Cooling Water			
• Quality	Demineralized (resistivity >50kΩ–cm), 20 µm filtered		
• Recommended Flow	3 L/min (0.8 gpm)		
• Temperature	17 - 23°C (63 - 73°F), rated 20°C (68°F)		
Power			
• Power Requirements	220V 50/60hz 3-Ph (20Amp)		
• Power Consumption	1.5 kW		
Weight	1200 lbs		1500lbs
Dimensions	6.6ft x 2.5ft x 4.2ft (HxWxL)		6.6ft x 2.5ft x 6ft(HxWxL)
Optional Items			
Membrane Degassification	Available		
Variable Speed Water Pump	Available		
High Ozone Concentration	Available		
TOC Meter	Available		
Dissolved O_3 Destruct	Not Available		Available

Ordering Information

Please contact your local MKS office for price and availability information.

MKS Instruments, Inc. Global Headquarters
2 Tech Drive, Suite 201
Andover, MA 01810
Tel: 978.645.5500
Tel: 800.227.8766 (in USA)
Web: www.mksinst.com

MKS Instruments, Inc. Plasma & Reactive Gas Solutions
90 Industrial Way
Wilmington, MA 01887
Tel: 978.284.4000

MKS Instruments Deutschland GmbH Plasma & Reactive Gas Solutions
Wattstr. 11-13
13355 Berlin, Germany
Tel: +49.30.464.0030

LIQUOZON *Ultra* - 11/15

© 2009-2015 MKS Instruments, Inc.
All rights reserved.

MKS products provided subject to the US Export Regulations. Diversion or transfer contrary to US law is prohibited.
Specifications are subject to change without notice.
mksinst™ is a trademark and LIQUOZON® and SEMOZON® are registered trademarks of MKS Instruments, Inc., Andover, MA.
Teflon® and Kynar® are registered trademarks of E.I. Dupont Co., Inc., Wilmington, DE.