Integrated Process Solutions

WWW.MKSINST.COM

TEOS Trap

The TEOS Trap, when used as one element of a TEOS Effluent Management Subsystem™, has proven very effective in reducing particulates and increasing uptime. The TEOS Trap collects TEOS byproducts, preventing them from backstreaming into the furnace and contaminating the pump. In test cases, a greater than 20% reduction in particulates has been recorded.

Maintenance is simplified, by cleaning a single component versus many feet of piping. The large trapping capacity leads to longer preventative maintenance cycles. The high trapping efficiency provides better protection to the pump, valves and other downstream instrumentation.

Features and Benefits

- Improve wafer yields - when used as part of a TEOS Effluent Management Subsystem™
- Overall yield improvement of 2-3%
- Greater than 20% particle reduction
- Increases uptime, reduces downtime
- Easy cleaning and maintenance of Trap
- Protect vacuum pump and valves
- Low cost of ownership - pay back in less than one day
- High flow conductance
- Light weight and compact
- Available in several sizes for use with the most common lines

Applications

Low-pressure chemical vapor deposition using TEOS (tetraethylorthosilicate, $Si(OC_2H_5)_4$) is a popular precursor for the deposition of silicon dioxide as an interlayer dielectric film. The use of TEOS does create problems on the downside of the process chamber in the vacuum pump lines. TEOS and its byproducts have a propensity to clog the vacuum pump line with solid and viscous-liquid effluent byproducts. This increases particle levels, impedes gas flow, and can cause catastrophic pump failure.

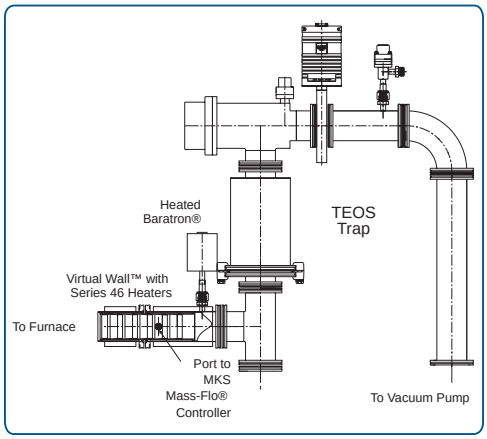

Installation Example

Specifications and Ordering Information

Specifications

Capacity 6” 8”	 1.5 lbs. (.68 kg) 2.5 lbs. (1.14 kg)
Flow Conductance (Viscous Flow Region)	p=pressure in mTorr c(sscm/mTorr) = 1.4p slightly higher than 3" tube
Pressure Drop Across Trap	Q=gas flow rate in sccm p=pressure in mTorr $\Delta p=Q/c$
Typical Dry Weight 6" Angle 6" Inline 8" Angle 8" Inline	 21 lbs. (9.6 kg) 13 lbs. (5.9 kg) 26 lbs. (11.8 kg) 18 lbs. (8.2 kg)

Flange Seals

Description	Part Number
6" Body	
Viton	100760516
Kalrez	100010188
8" Body	
Viton	100760520
Kalrez	100010228

Replacement Elements

Description	Part Number
6" Body, NW50 or NW80	100012369
8" Body, NW80	100010441
8" Body, NW100	100010225

TEOS Trap Ordering Information

Body TSTRP	Body Size X	Port Size -XXX	Configuration -X	Flanging X	Seal Type -X
Select 1	**Select 1**	**Select 1**	**Select 1**	**Select 1**	**Select 1**
TSTRP	**6** 6" Body NW50 & NW80 only **8** 8" Body NW80 & NW100 only	**050** NW 50 **080** NW 80 **100** NW100	**A** Angle **I** Inline	**K** KF **M** MF NW80 & 100 only	**V** Viton® **K** Kalrez®

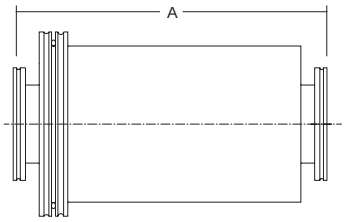

	NW50 - 6”	NW80 - 6”	NW80 - 8”	NW100 - 8”
A	11.4 (290)	12.1 (307)	12.1 (307)	12.1 (307)

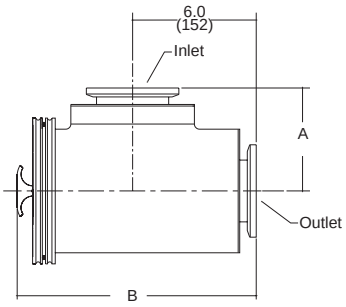

	NW50 - 6”	NW80 - 6”	NW80 - 8”	NW100 - 8”
A	5.0 (127)	5.0 (127)	6.3 (159)	6.3 (159)
B	11.5 (292)	11.5 (292)	12.0 (305)	12.0 (305)

Dimensional Drawing —

Note: Unless otherwise specified, dimensions are nominal values in inches.

MKS Instruments, Inc.
Global Headquarters

2 Tech Drive, Suite 201
Andover, MA 01810

Tel: 978.645.5500
Tel: 800.227.8766 (in USA)
Web: www.mksinst.com

MKS Instruments, Inc.
Integrated Process Solutions

5330 Sterling Drive
Boulder, CO 80301

Tel: 303.449.9861
Tel: 800.345.1967 (in USA)

© 2008 MKS Instruments
All rights reserved.

MKS products provided subject to the US Export Regulations. Diversion or transfer contrary to US law is prohibited. Specifications are subject to change without notice. mksinst™, Virtual Wall™ and Effluent Management Subsystems™ are trademarks of MKS Instruments, Inc. Viton® and Kalrez® are registered trademarks of EI DuPont de Nemours & Co., Inc. US Patent # 6197119. Foreign patents pending.