Valve Solutions

WWW.MKSINST.COM

R Series Gate Valve

ROUGHING PUMP ISOLATION FOR SEMICONDUCTOR SUBFAB AND GENERAL VACUUM APPLICATIONS

MKS Instruments, a leader in high reliability and high performance vacuum isolation and pressure control valves, introduces the R Series Gate Valve product line.

The MKS R Series Gate Valve is optimized for isolation of roughing pumps and roughing lines in both semiconductor and general vacuum applications. The R Series is available with a range of options, including pneumatic and manual actuators, lockout tagout capability, and position indicators. The R Series employs an elastomer shaft seal for the actuator seal, which enables high performance in a cost effective, high value package for roughing vacuum applications. The stainless steel version of the R Series Gate valve is available in DN80, DN100, and DN160 sizes.

Features & Benefits

Complete Roughing Pump Isolation Solution

- Cost effective
- High value

High Performance Heating Option

- Excellent temperature uniformity ensures no cold spots on internal surfaces
- Prevents condensation of effluents and corrosive gases

High Reliability and Long Cycle Life

- DN80 and DN100 > 200,000 cycles
- DN160 > 100,000 cycles

Flexible Sizing and Configuration

- Stainless steel and aluminum versions
- DN80, DN100 and DN160mm sizes available

MKS R Series Gate Valve is available in both Aluminum and Stainless Steel configurations.

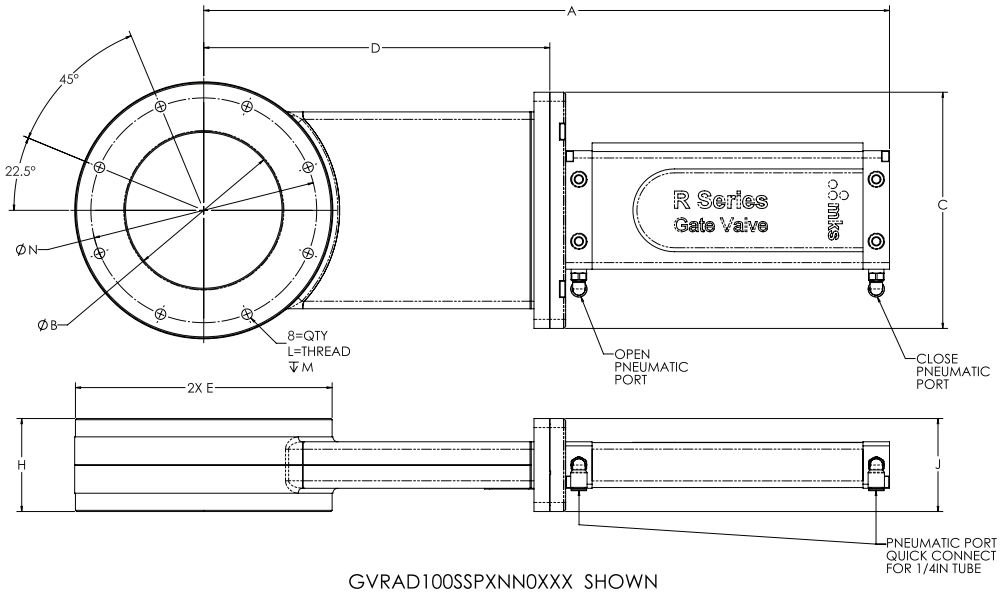

GVRAD100SSPXNN0XXX SHOWN

Pneumatic Actuation, SS										
Flange Size	A	B	C	D	E	H	J	L	M	N
DN080	16.27 [413]	3.14 [80]	6.00 [152.4]	7.68 [195]	5.71 [145]	2.36 [60]	2.36 [60]	M8 x 1.25-6H	0.47 [12]	4.92 [125]
DN100	17.34 [440.4]	3.96 [100.6]	6.00 [152.4]	8.75 [222]	6.49 [165]	2.36 [60]	2.36 [60]	M8 x 1.25-6H	0.47 [12]	5.71 [145]
DN160	23.12 [587]	5.91 [150]	8.85 [225]	12.20 [310]	8.82 [224]	2.76 [70]	2.44 [62]	M10 x 1.5-6H	0.59 [15]	7.87 [200]

Stainless Steel Gate Valve with Pneumatic Actuator

Note: Unless otherwise specified, dimensions are nominal values in inches (mm referenced).

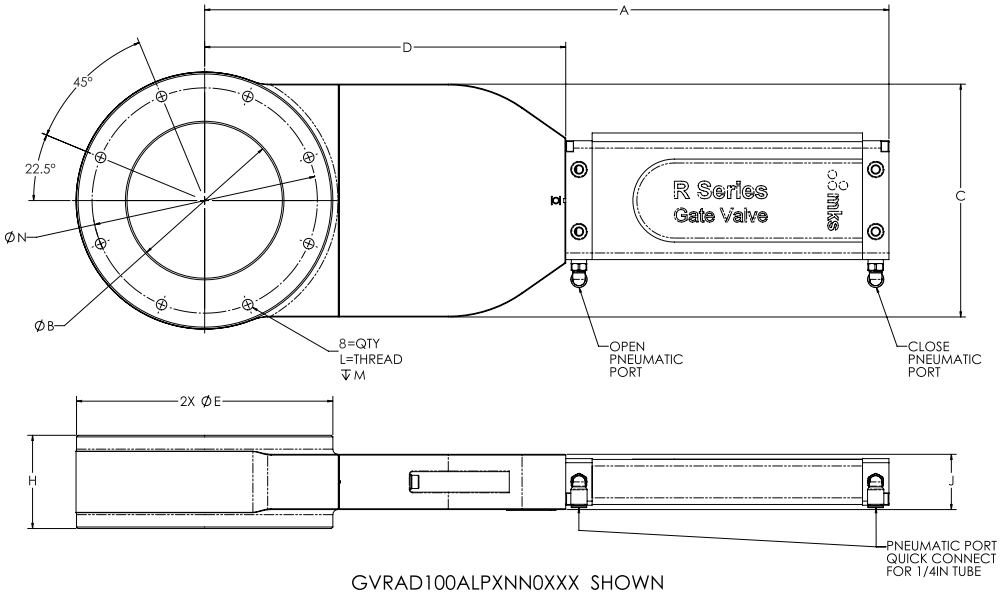

GVRAD100ALPXNN0XXX SHOWN

Pneumatic Actuation, AL										
Flange Size	A	B	C	D	E	H	J	L	M	N
DN100	17.34 [440.4]	3.94 [100]	5.90 [150]	9.15 [232.4]	6.50 [165]	2.36 [60]	1.40 [35.6]	M8 x 1.25-6H	0.43 [11]	5.71 [145]

Aluminum Gate Valve with Pneumatic Actuator

Note: Unless otherwise specified, dimensions are nominal values in inches (mm referenced).

Dimensional Drawings

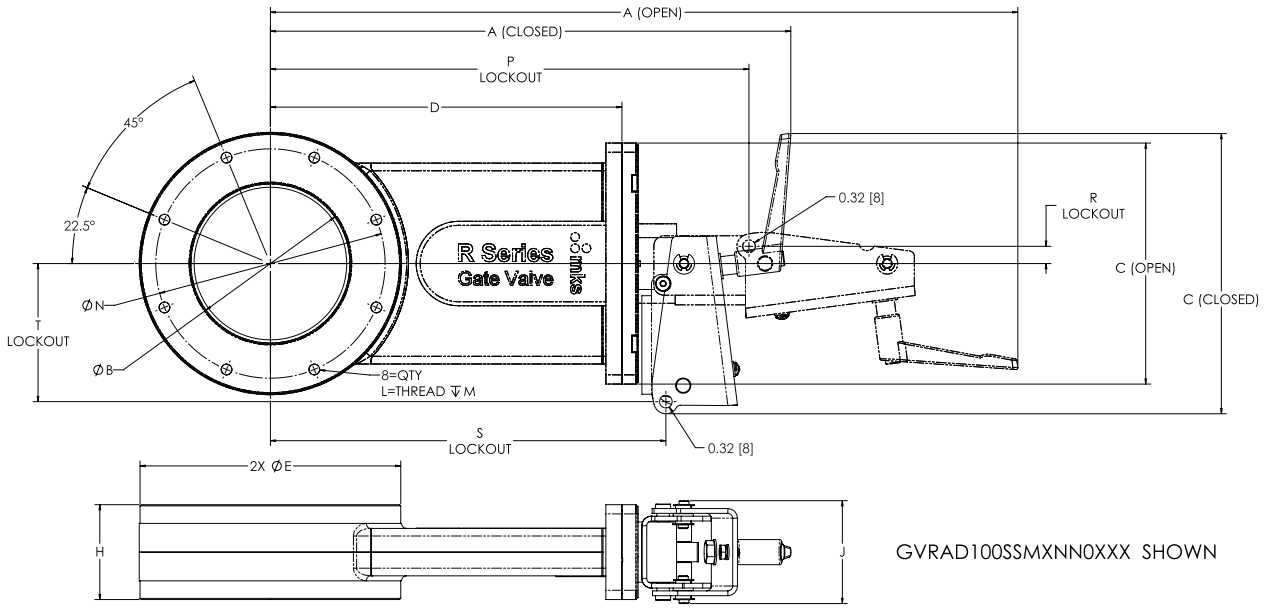

Manual Actuation, SS																
Flange Size	A (Open)	A (Closed)	B	C (Open)	C (Closed)	D	E	H	J	L	M	N	P Lockout (Open)	R Lockout (Open)	S Lockout (Close)	T Lockout (Close)
DN080	18.24 [463]	12.59 [320]	3.14 [80]	6.00 [152.4]	6.97 [177]	8.38 [213]	5.71 [145]	2.36 [60]	2.56 [65]	M8 x 1.25-6H	0.47 [12]	4.92 [125]	11.55 [293.3]	0.43 [11]	9.48 [240.8]	3.44 [87.3]
DN100	18.61 [472.6]	12.95 [329]	3.96 [100.6]	6.00 [152.4]	6.97 [177]	8.75 [222]	6.49 [165]	2.36 [60]	2.56 [65]	M8 x 1.25-6H	0.47 [12]	5.71 [145]	11.91 [302.6]	0.43 [11]	9.84 [250]	3.44 [87.3]
DN160	25.01 [635]	17.75 [451]	5.91 [150]	8.85 [225]	9.38 [238]	12.20 [310]	8.82 [224]	2.76 [70]	2.60 [66]	M10 x 1.5-6H	0.59 [15]	7.87 [200]	16.39 [416.2]	0.66 [16.7]	13.26 [336.7]	4.67 [118.7]

Stainless Steel Gate Valve with Manual Actuator

Note: Unless otherwise specified, dimensions are nominal values in inches (mm referenced).

Specifications

Leak Rate	
Side to Side	1* 10^{-9} atm*cc/sec
External	1* 10^{-9} atm*cc/sec
Pressure Range	
Pressure	1* 10^{-7} to 1200 Torr (1.3* 10^{-10} - 1.6 bar)
Max Delta P (Closed)	1.6 atm, either direction
Max Delta P (Operating)	< 22.5 Torr (30 mbar) chamber side high* < 22.5 Torr (30 mbar) pump side high **Valve is operable up to 760 Torr (1 bar) chamber side high, but cycle life will be reduced with operation > 30 mbar.*
Wetted Materials	
Stainless Steel	304L SS, 316L SS, 440C SS, Krytox LVP
Aluminum	6061 AL, 304L SS, 316L SS, 440C SS, Krytox LVP
Seals	
Standard	Viton® (FKM)
Optional	Chemraz®, Kalrez® compounds
Temperature	
Body Temperature	
Viton Seals	10°C to 105°C
Optional Seals	10°C to 150°C
Actuator Temperature	10°C to 80°C
Solenoid Temperature	10°C to 50°C
Actuation Type	Double acting pneumatic or manual
Actuation Time	< 2 sec
Actuator Seal	Elastomer shaft seal
Maintenance	DN80: 200,000 cycles before maintenance DN100: 200,000 cycles before maintenance DN160: 100,000 cycles before maintenance MTTR: 15 minutes; Can be serviced without removal from vacuum system
Pneumatic Pressure	5.4 ±1.3 atm (80 ±20 psig)
Limit Switch	Magnetic Reed Switch: Current rating < 80mA

Ordering Information

Example: GVRAD100SSPVNN20	Code	Configuration
Type GVRA	GVRA	GVRA
Valve Bore/Flange Size		
DN80	D080	D100
DN100	D100	
DN160	D160	
Material		
Stainless Steel	SS	SS
Aluminum[1]	AL	
Actuation		
Pneumatic	P	P
Manual	M	
Pneumatic with Lockout Tagout	L	
Seal Materials[2]		
Viton/FKM	V	V
Kalrez 9100	M	
Kalrez 9500	N	
Bypass Option		
None	N	N
Limit Switches[3]		
None	N	N
Limit Switch (Both Switches Normally Open)	L	
Limit Switch (Both Switches Normally Closed)	C	
Limit Switch (Valve Open Continuity)[4]	D	
Limit Switch (Valve Closed Continuity)[5]	E	
Solenoids[6]		
None	0	2
24 VDC	2	
12 VDC	1	
Heating Options		
Heatable to 105°C	0	0
Heatable to 150°C	1	

Note 1: Contact MKS Applications – available in limited configurations.
Note 2: Contact MKS Applications for alternate seal materials.
Note 3: Switches have 2m long, unterminated flying leads.
Note 4: Both limit switches have continuity when valve is in Open Position.
Note 5: Both limit switches have continuity when valve is in Closed Position.
Note 6: Contact MKS Applications for alternate solenoid configurations.

MKS Instruments, Inc.
Global Headquarters

2 Tech Drive, Suite 201
Andover, MA 01810

Tel: 978.645.5500
Tel: 800.227.8766 (in U.S.A.)
Web: www.mksinst.com

MKS Instruments, Inc.
Valve Solutions

Six Shattuck Road
Andover, MA 01810

Tel: 978.975.2350

R Series Gate Valve - 4/19
© 2016-2019 MKS Instruments, Inc.
All rights reserved.

MKS products provided subject to the US Export Regulations. Diversion or transfer contrary to US law is prohibited. Specifications are subject to change without notice. mksinst™ is a trademark of MKS Instruments, Inc., Andover, MA. Chemraz® is a registered trademark of Greene, Tweed & Co, Kulpsville, PA. Kalrez® and Viton® are registered trademarks of E.I. Dupont Co., Inc., Wilmington, DE.