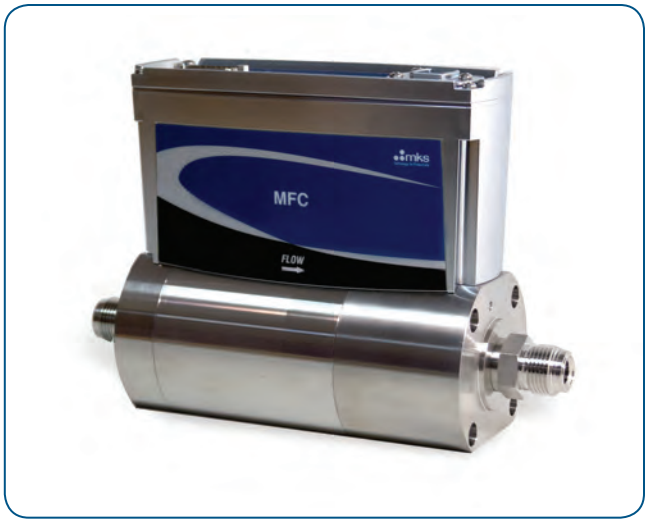

Flow Solutions

WWW.MKSINST.COM

IE500A/IE1000A

INDUSTRIAL MASS FLOW CONTROLLER, FLOW RATES UP TO 1000 SLM, IP66 RATED, MULTI-GAS/MULTI-RANGE

The IE500A and IE1000A mass flow controllers are elastomer-sealed, multi-gas/multi-range MFCs designed for use in harsh environments where resistance to liquid and dust ingress are essential. Applications include those where “hose down” may be required, such as industrial glass production where moisture and particulates are present. With its IP66 rated enclosure, the IE500A and IE1000A meet the stringent requirements of these aggressive environments.

The IE500A is capable of being ranged from 250 slm to 500 slm (N_2 equivalent) while the IE1000A is capable of being ranged from 501 to 1000 slm (N_2 equivalent). The broad flow range is enabled by the MFC’s unique control valve design, which responds rapidly to set point changes while maintaining closed conductance leak rates that are well below competitive high flow MFCs.

Settling times of 2 to 3 seconds and set point accuracies below 1% of set point exceed those of other typical high flow MFCs. Precise control is maintained down to 2% of the IE500A and IE1000A’s configured Full Scale flow range. The multi-gas/multi-range capability, along with tight performance specifications for accuracy, control range, and transient response allow users to minimize inventory of high flow MFC part numbers.

The multi-gas/multi-range feature (along with other custom controls) is accessed through the MFCs embedded diagnostic interface, which requires no special software or hardware to operate. A standard Ethernet cable and JAVA-enabled HTML browser, widely available, are all the tools needed. The critical gas parameters for typical high flow rate gases are already stored on the device. Configuring the device is simply a matter of selecting the gas from a drop down menu and specifying the desired Full Scale flow range. The diagnostic interface also allows the user to perform routine device health checks, plot flow response, and store operating data for offline analysis.

Features & Benefits

Improved Performance

- IP66 rated enclosure provides protection against ingress of water and dust present in harsh environments
- Fast response to set point change reduces flow stabilization time for short process steps, enhancing process throughput
- Tightly controlled flow accuracy of process gas enables improved process matching
- Reduced inlet pressure (pressure drop) requirement simplifies gas supply regulation from a single source

Reduces Overall Costs

- Reduces MFC inventory through its multi-gas/multi-range capability
- Accurate flow control over a wide dynamic range, even when down ranged, reduces need for an additional low range MFC

Easy to Integrate and Operate

- Device configuration and diagnostics made simple through standard Ethernet interface
- Uses a standard web browser with no special software required

Performance

Full Scale Flow Ranges *(N_2 equivalent)*	
IE500A	250 - 500 slm
IE1000A	501 - 1000 slm
Maximum Inlet Pressure	150 psig (cannot exceed pressure differential requirement across MFC)
Normal Operating Pressure Differential *(with atmospheric pressure at the MFC outlet*	40 to 50 psid (dependent on fitting type)
Burst Pressure	1500 psig
Control Range	2% to 100% of Full Scale (range on mech.)
Typical Accuracy	±1% of set point for > 20% to 100% Full Scale ±0.25% of Full Scale for 5% to 20% Full Scale
Repeatability	±0.5% of Reading
Resolution	0.1% of Full Scale
Temperature Coefficients	
Zero	<0.05% of Full Scale/°C
Span	<0.08% of Reading/°C
Inlet Pressure Coefficient	<0.03% of Reading/psi
Typical Controller Settling Time	<3 sec typical above 10% Full Scale @ 50 psi
Warm-up Time	One (1) hour
Operating Temperature Range *(Ambient)*	10°C to 50°C
Storage Humidity	0 to 95% relative humidity, non-condensing
Storage Temperature	-20° to 65°C (-4° to 149° F)

Mechanical

Fittings *(compatible with)*	Swagelok® 8 VCR® male, 8 VCO® male, ½" tube compression, 12 mm compression, ¾" tube compression, ½" NPT female, ¾" NPT female Consult factory for availability for Swagelok 12 VCR male and 12 VCO male
Leak Integrity	
External (scc/sec He)	$<1 \times 10^{-9}$
Through closed valve	<1.0% Full Scale at 40 psia to vac (<500 mTorr) (To assure no flow-through, a separate positive shut-off valve is required.)
Wetted Materials	
Standard	316 S.S., Elgiloy®, 430FR, PTFE
Seal Options	Viton, Viton (USP Class VI), EPDM (USP Class VI)
Surface Finish	20 µinch average Ra
Weight	less than 12.7 lbs. (5.8 kg)
Enclosure Rating	IP66

Electrical Analog I/O

Input Power Required	+15 to +24 VDC @ (< 8 watts)
Flow Input/Output Signal	
Voltage (0 to 5 VDC)	15-pin Type “D” male
Current (4 to 20 mA)	15-pin Type “D” male
Compliance	CE

Dimensional Drawing

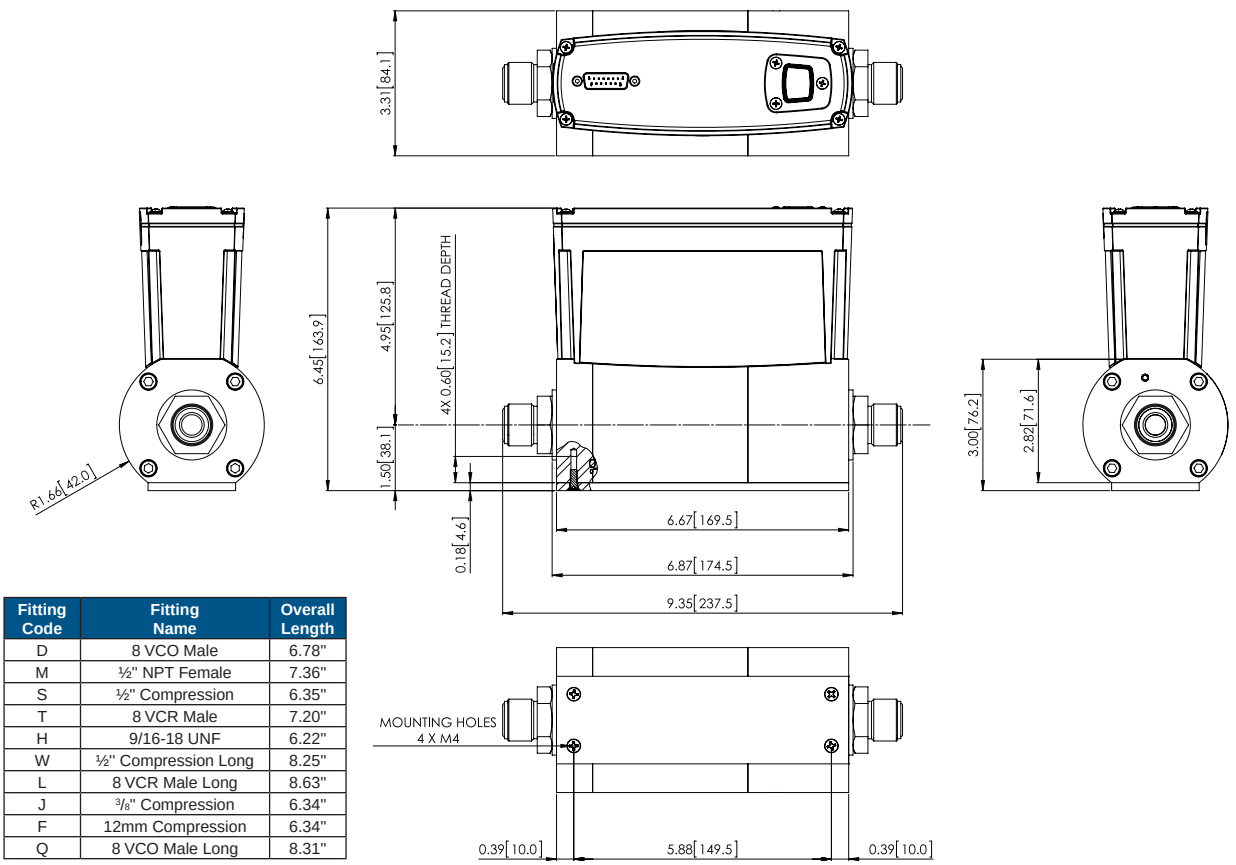

Fitting Code	Fitting Name	Overall Length
D	8 VCO Male	6.78"
M	½" NPT Female	7.36"
S	½" Compression	6.35"
T	8 VCR Male	7.20"
H	9/16-18 UNF	6.22"
W	½" Compression Long	8.25"
L	8 VCR Male Long	8.63"
J	⅜" Compression	6.34"
F	12mm Compression	6.34"
Q	8 VCO Male Long	8.31"

Dimensional Drawing

Note: Unless specified, dimensions are nominal values in inches (mm referenced).
**(See manual for additional I/O and fitting types)*
x.xx = ±0.020 tolerance

Ordering Information

Ordering Code Example: IE1000A013106T6R020	Code	Configuration
MFC High Flow Mass Flow Controller (multi-gas, multi-range)	IE500A/IE1000A	IE1000A
Gas*		
For example:		013
001 = Helium = He	001	
004 = Argon = Ar	004	
007 = Hydrogen = H_2	007	
013 = Nitrogen = N_2	013	
Flow Range Full Scale**		
500 slm (500,000 sccm)	505	106
1000 slm (1,000,000 sccm)	106	
Fittings *(compatible with)*		
12 mm compression	L	T
½" tube compression	S	
¾" tube compression	Z	
½" NPT female	M	
¾" NPT female	N	
8 VCR male	T	
8 VCO male	D	
Connector (Power & Control I/O)		
DeviceNet™	6	6
RS485 (uses 9 pin connector)	5	
Profibus®	4	
15 pin D (Analog 0 to 5 VDC I/O)	B	
15 pin D (4 to 20 mA I/O)	G	
Seal Materials		
EPDM (FDA Compliant)	R	R
Viton	V	
Viton (FDA Compliant)	W	
Reserved for MKS Future Use		
Standard	0	0
MFM	3	
Firmware		
Unless otherwise specified, MKS will ship firmware revision current to date	20	20

* For gases not listed in the standard products gas table, please contact the MKS applications department for assistance.

Gas Table			
Gas Name*	**Semi Gas Code**	**Gas Formula**	**Min - Max Full Scale (slm)**
Helium	001	He	700 to 1400
Argon	004	Ar	450 to 900
Hydrogen	007	H_2	500 to 1000
Air	008	Air	500 to 1000
Nitrogen	013	N_2	500 to 1000

** The Full Scale flow rate is designated by a 3 digit number. The first two digits represent the significant digits of the Full Scale flow rate separated by a decimal point. The third digit is the exponent of the power of ten.

Example flow rate code: 255 is 2.5×10^5 sccm or 250 slm 105 is 1.0×10^5 sccm or 100 slm

MKS Instruments, Inc.
Global Headquarters

2 Tech Drive, Suite 201
Andover, MA 01810

Tel: 978.645.5500
Tel: 800.227.8766 (in U.S.A.)
Web: www.mksinst.com

MKS Instruments, Inc.
Flow Solutions

Six Shattuck Road
Andover, MA 01810

Tel: 978.975.2350

IE500A/IE1000A - 4/19

© 2015-2018 MKS Instruments, Inc.
All rights reserved.

MKS products provided subject to the US Export Regulations. Diversion or transfer contrary to US law is prohibited.

Specifications are subject to change without notice. mksinst™ is a trademark of MKS Instruments, Inc., Andover, MA. Swagelok®, VCR® and VCO® are registered trademarks of Swagelok Marketing Co., Solon, OH. Viton® and Neoprene® are registered trademarks of E.I. Dupont Company, Wilmington, DE. Elgiloy® is a registered trademark of Elgiloy Specialty Metals, Elgin, IL. DeviceNet™ is a trademark of the Open DeviceNet Vendor Association, Coral Springs, FL. Profibus® is a registered trademark of Profibus International, Karlsruhe, Germany.