Flow Solutions

WWW.MKSINST.COM

IE250A

IP66 RATED, ELASTOMER SEALED, DIGITAL MASS FLOW CONTROLLER, FLOW RATES UP TO 250 SLM

The IE250A is a general purpose, elastomer sealed MFC well suited for use in harsh environments where resistance to liquid or dust ingress are critical. The IE250A meets these requirements with its IP66 rated enclosure design.The IE250A incorporates the latest in digital flow control electronics along with a well proven, patented thermal sensor and mechanical design for Full Scale flow rates from 100 to 250 slm, N_2 equivalent. This MFC is available with either analog or digital I/O. The digital control electronics utilize the latest in MKS control algorithms provide fast and repeatable response to set point.

Settling times of 1 to 2 seconds and set point accuracies below 1% of set point outperform those of other typical high flow MFCs. Precise control is maintained down to 2% of the IE250A configured Full Scale flow range. The multi-gas/multi-range capability, along with tight performance specifications for accuracy, control range, and transient response allow users to minimize inventory of high flow MFC part numbers.

The multi-gas/multi-range feature (along with other custom controls) is accessed through the MFCs embedded diagnostic interface, which requires no special software or hardware to operate. A standard Ethernet cable and JAVA-enabled HTML browser, widely available, are all the tools needed. The critical gas parameters for typical high flow rate gases are already stored on the device. Configuring the device is simply a matter of selecting the gas from a drop down menu and specifying the desired Full Scale flow range. The diagnostic interface also allows the user to perform routine device health checks, plot flow response, and store operating data for offline analysis.

Features & Benefits

Improved Performance

- Fast response to set point change reduces flow stabilization time for short process steps, enhancing process throughput
- Tightly controlled flow accuracy of process gas enables improved process matching
- Reduced inlet pressure (pressure drop) requirement simplifies gas supply regulation from a single source

Reduces Overall Costs

- Reduces MFC inventory through its multi-gas/multi-range capability
- Accurate flow control over a wide dynamic range, even when down ranged, reduces need for an additional low range MFC

Easy to Integrate and Operate

- Device configuration and diagnostics made simple through standard Ethernet interface
- Uses a standard web browser with no special software required

Performance

Full Scale Flow Ranges *(N_2 equivalent)*	100 to 250 slm
Maximum Inlet Pressure	150 psig (cannot exceed pressure differential requirement across MFC)
Normal Operating Pressure Differential *(with atmospheric pressure at the MFC outlet)*	30 to 55 psid (dependent on fitting type)
Burst Pressure	1500 psig
Control Range	2% to 100% of Full Scale (range on mech.)
Typical Accuracy	± 1% of set point for > 20% to 100% Full Scale ± 0.25% of Full Scale for 5% to 20% Full Scale
Repeatability	± 0.5% of Reading
Resolution	0.1% of Reading
Temperature Coefficients	
Zero	< 0.05% of Full Scale/°C
Span	< 0.08% of Reading/°C
Inlet Pressure Coefficient	< 0.03% of Reading/psi or less
Typical Controller Settling Time	1 to 2 seconds typical above 10% Full Scale @ 50 psi
Warm-up Time	one (1) hour
Operating Temperature Range *(Ambient)*	10°C to 50°C
Storage Humidity	0 to 95% relative humidity, non-condensing
Storage Temperature	-20° to 65°C (-4° to 149° F)

Mechanical

Fittings *(compatible with)*	8 VCO® male, ½" NPT female, ½" Compression, 8 VCR® male, 12 mm Swagelok, 3/8" Swagelok, W-seal, ½" Compression Long, 8 VCR Male Long, 8 VCO Male Long
Leak Integrity	
External (scc/sec He)	< 1 x 10^{-9}
Through closed valve	< 1.0% Full Scale at 40 psia to vac (<500 mTorr) (To assure no flow-through, a separate positive shut-off valve is required.)
Wetted Materials	
Standard	316 S.S., 17-7 S.S., Elgiloy®, 430FR
Seal Options	Viton® (Class VI), EPDM (Class VI)
Surface Finish	16 µinch average Ra
Weight	less than 4.5 lbs. (2.05 kg)
Enclosure Rating	IP66

Electrical Analog I/O

Input Power Required	+15 to +24 VDC @ (< 4 watts)
Flow Input/Output Signal	
Voltage (0 to 5 VDC)	15-pin Type “D” male
Current (4 to 20 mA)	15-pin Type “D” male
Compliance	CE

Dimensional Drawing

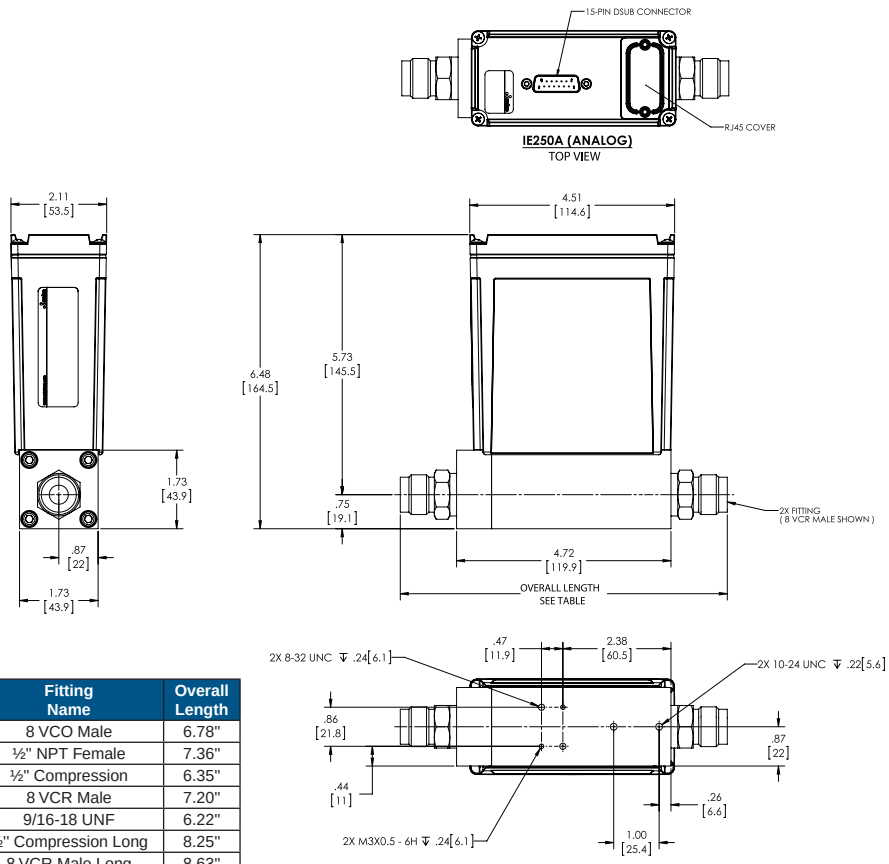

Fitting Code	Fitting Name	Overall Length
D	8 VCO Male	6.78"
M	½" NPT Female	7.36"
S	½" Compression	6.35"
T	8 VCR Male	7.20"
H	9/16-18 UNF	6.22"
W	½" Compression Long	8.25"
L	8 VCR Male Long	8.63"
J	⅜" Compression	6.34"
F	12mm Compression	6.34"
Q	8 VCO Male Long	8.31"

Dimensional Drawing

Note: Unless specified, dimensions are nominal values in inches (mm referenced).
**(See manual for additional I/O and fitting types)*

Ordering Information

Ordering Code Example: IE250A013255T4R0020	Code	Configuration
MFC High Flow Mass Flow Controller (multi-gas, multi-range)	IE250A	IE250A
Gas*		
For example:		013
001 = Helium = He	001	
004 = Argon = Ar	004	
007 = Hydrogen = H_2	007	
013 = Nitrogen = N_2	013	
Flow Range Full Scale**		
250 slm (250,000 sccm)	255	255
Fittings *(compatible with)*		T
12 mm Swagelok	F	
3/8" Swagelok	J	
½" tube compression	S	
½" Compression Long	W	
½" NPT female	M	
8 VCR Male	T	
8 VCO Male	D	
8 VCR Male Long	L	
8 VCO Male Long	Q	
W-Seal	H	
Connector (Power & Control I/O)		4
Profibus® (1480 Compatible)	4	
Profibus (1179B Compatible)	3	
15 pin D (Analog 0 to 5 VDC I/O)	B	
15 pin D (4 to 20 mA I/O)	H	
Analog 0 to 5 VDC (15 pin D Connector), Brooks (Consult Factory)	E	
Analog 0 to 5 VDC (15 pin D Connector), Celerity (Consult Factory)	U	
Seal Materials		R
EPDM (FDA Compliant)	R	
Viton (FDA Compliant)	W	
Valve/Device Type		0
Normally Closed	0	
Mass Flow Meter	3	
Reserved for MKS Future Use		
Standard	0	0
Firmware		
Unless otherwise specified, MKS will ship firmware revision current to date	20	20

* For gases not listed in the standard products gas table, please contact the MKS applications department for assistance.

Gas Table			
Gas Name*	**Semi Gas Code**	**Gas Formula**	**Min - Max Full Scale (slm)**
Helium	001	He	140 to 350
Argon	004	Ar	140 to 250
Hydrogen	007	H_2	100 to 250
Air	008	Air	100 to 250
Nitrogen	013	N_2	100 to 250

** The Full Scale flow rate is designated by a 3 digit number. The first two digits represent the significant digits of the Full Scale flow rate separated by a decimal point. The third digit is the exponent of the power of ten.

Example flow rate code: 255 is 2.5×10^5 sccm or 250 slm 105 is 1.0×10^5 sccm or 100 slm

MKS Instruments, Inc.
Global Headquarters

2 Tech Drive, Suite 201
Andover, MA 01810

Tel: 978.645.5500
Tel: 800.227.8766 (in U.S.A.)
Web: www.mksinst.com

MKS Instruments, Inc.
Flow Solutions

Six Shattuck Road
Andover, MA 01810

Tel: 978.975.2350

IE250A - 10/18
© 2015-2018 MKS Instruments, Inc.
All rights reserved.

MKS products provided subject to the US Export Regulations. Diversion or transfer contrary to US law is prohibited.
Specifications are subject to change without notice. mksinst™ is a trademark of MKS Instruments, Inc., Andover, MA. Swagelok®, VCR® and VCO® are registered trademarks of Swagelok Marketing Co., Solon, OH. Viton® is a registered trademark of E.I. Dupont Company, Wilmington, DE. Elgiloy® is a registered trademark of Elgiloy Specialty Metals, Elgin, IL. Profibus® is a registered trademark of Profibus International, Karlsruhe, Germany.