Flow Solutions

WWW.MKSINST.COM

HA-MFV EtherCAT®

HIGH ACCURACY MASS FLOW VERIFIER

The MKS High Accuracy MFV is designed for installation on the process tool to verify the mass flow controller flow rate in situ. The HA-MFV's 1.0% of Reading measurement accuracy gives the user the ability to verify the MFC's flow with the actual process gas to a degree significantly better than previous rate-of-rise devices or the process chamber rate-of-rise method. The former devices were subject to external volume effects while the latter method were subject to significant variation due to process chamber conditions.

The HA-MFV provides significantly better measurement accuracy and is insensitive to external volume (volume from MFC to the HA-MFV) conditions and variation. Insensitivity of the HA-MFV to external volume also results in more precise matching of measurements between HA-MFVs on multiple tools for the same process; assuring the user of precise tool-to-tool process matching.

The insensitivity of the HA-MFV to external volume is realized through the use of sonic nozzle technology. The sonic nozzle creates a pressure drop and sonic flow conditions. In sonic flow, variations in pressure downstream of the nozzle have no effect on upstream conditions. Thus, the sonic nozzle effectively decouples the measurement in the HA-MFV from the upstream volume.

Features & Benefits

- Superior 1.0% or better measurement accuracy enables wafer-to-wafer, chamber-to-chamber, and tool-to-tool process matching
- Ability to support multiple gas panels on a process tool due to its external volume insensitivity reduces cost of implementation
- Wide measurement range of 3 to 3000 sccm enables the measurement of most critical gas flow for a wide variety of semiconductor processes
- In situ assessment of MFC flow rate improves process control and avoids unnecessary downtime due to removal of a "good" MFC
- Rapid measurement times allow easy integration into tool preventative maintenance schedules

1. Patents Pending.

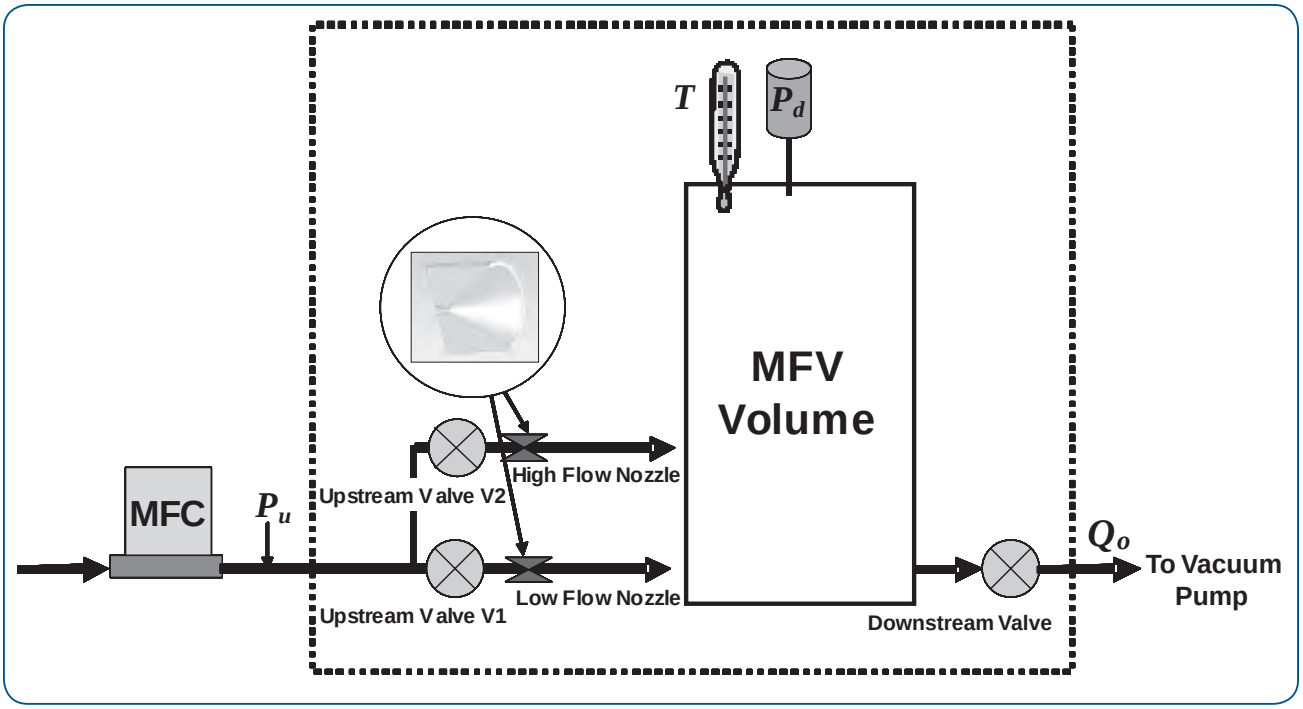

HA-MFV Functional Block Diagram —

The HA-MFV utilizes sonic nozzles to isolate upstream flow conditions from the device making it external volume insensitive. This insensitivity along with precise temperature, pressure and volume measurements enables the device to provide measurement accuracies of better than 1.0% of Reading.

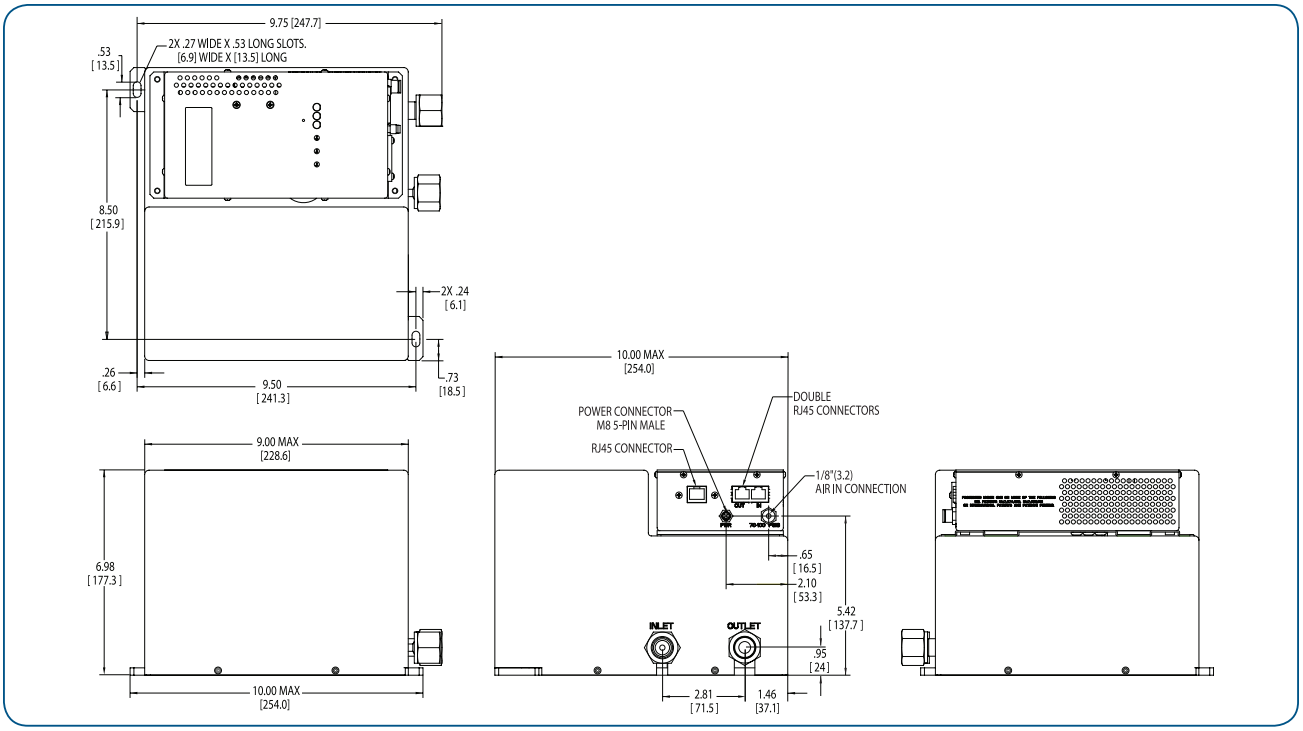

Dimensional Drawing —

Note: Dimensions are for reference only.

Specifications

Performance

Mass Flow Verification Accuracy[1]	±1.0% Reading
Mass Flow Verification Range[2]	3 to 3000 sccm N_2 equivalent
Repeatability	±0.5% Reading
Reproducibility	±0.3% Reading
Pressure Range	100 Torr
Pressure Accuracy	0.25% Reading
Proof Pressure	45 psia
Burst Pressure	150 psig
Pneumatic Air Supply Pressure	
Minimum	80 psig
Maximum	100 psig
Temperature Coefficients	
Span	<0.002% Reading/°C
Warm up Time	60 minutes
Normal Operating Temperature	10° to 40°C
Temperature Display	0° to 100°C
Temperature Readout Units	°C
Temperature Accuracy	+2°C
Temperature Resolution	0.1°C
Compliance	CE

Environmental

Storage Humidity Range	0 to 95% RH non-condensing
Storage Temperature	-20° to 60°C (-4° to 160°F)

Electrical/Communications

Control Interface Options	
EtherCAT	Dual RJ-45 (Comm.) M8 Male 5pin (PWR)
Diagnostic Interface Options	
EtherNet	RJ-45 female
Input Voltage	+24 VDC (±10%) (EtherCAT)
Input Current/Voltage Required	
Max Current at Start Up	+24 VDC (±5%) @ 500 mA
Avg Current at Steady State	+24 VDC (±5%) @ 250 mA (valves closed)

Physical

Body Overall (height x width x length)	6.98 in x 10.0 in x 10.0 in 177.3 mm x 254.0 mm x 254.0 mm
Process Connections	
Gas Supply	Swagelok® compatible 8-VCR® female rotatable
Vacuum Supply	Swagelok® compatible 8-VCR® female rotatable
Pneumatic Air Supply	1/8" one-touch quick connect tube
Leak Integrity	
External	<1 x 10^{-9} scc/sec He
Materials Wetted	
Volume	316L SST passivated, Inconel, Incoloy
Seals	316 SST nickel plated
Valve Seat	PCTFE with Elgiloy® Diaphragm
Surface Finish	<32 µ inches Ra
Weight	23.9 lbs (10.9 kg)

[1] Includes non-linearity, hysteresis, and non-repeatability.

[2] Maximum flow rate may be limited by specific gas properties, e.g. vapor pressure. Please consult factory for latest gas and flow rate list.

Ordering Information

High Accuracy Mass Flow Verifier (MFVC)	Consult Factory

MKS Instruments, Inc.
Global Headquarters

2 Tech Drive, Suite 201
Andover, MA 01810

Tel: 978.645.5500
Tel: 800.227.8766 (in U.S.A.)
Web: www.mksinst.com

MKS Instruments, Inc.
Flow Solutions

Six Shattuck Road
Andover, MA 01810

Tel: 978.975.2350

HAMFV EtherCAT - 12/18
© 2018 MKS Instruments, Inc.
All rights reserved.

MKS products provided subject to the US Export Regulations. Diversion or transfer contrary to US law is prohibited.

Specifications are subject to change without notice. mksinst™ is a trademark of MKS Instruments, Inc., Andover, MA. Swagelok® and VCR® are registered trademarks of Swagelok Marketing Co., Solon, OH. DeviceNet™ is a trademark of the Open DeviceNet Vendor Association, Coral Springs, FL. Elgiloy® is a registered trademark of Elgiloy® Limited Partnerships. EtherCAT® is a registered trademark and patented technology, licensed by Beckhoff Automation GmbH, Germany.