GPCMA

General Purpose Pressure Controller with Mass Flow Meter

The GPCMA is a metal-sealed pressure controller with an integral mass flow meter. It is suited for a wide variety of applications requiring pressure control capability from 500 Torr to 100 psi. The GPCMA incorporates the latest in digital flow control electronics along with a well proven, thermally stable pressure sensor and mechanical design. The mass flow meter provides the capability of monitoring mass flow rates as a diagnostic for critical process applications.

The GPCMA digitally controlled pressure controller is available with digital I/O (EtherCAT®, DeviceNet™ or RS485). The digital control electronics utilize the latest in MKS control algorithms providing fast and repeatable response to set point throughout the device control range. Typical response times are less than 1 second dependent on installation conditions. Included is a digital calibration that yields 1% of set point accuracy.

The GPCMA is available from 500 Torr to 100 psi Full Scale. Specific units may be selected at time of order. The user can easily configure the device to other pressure units such as kPa or mbar simply using the device embedded Ethernet user interface and a PC.

The GPCMA, with 4 VCR® fittings, is 1.125'' (28.6 mm) wide and 4.88'' (124 mm overall) length allowing it to fit in standard gas systems. It is also available with the 1.125'' (38.6 mm) IGS compatible c-seal and w-seal configurations. The GPCMA metal-sealed, pressure controller with its 10 microinch, electropolished surface finish is well suited for use in high purity process applications. The GPCMA is available with a normally closed valve.

Product Features

- Percent of set point accuracy enables precise process control
- Temperature compensated pressure sensor maintains tight accuracy over the operating temperature range
- Embedded user interface provides the ability to
  - Easily change device range and units to reduce inventory requirements
  - Monitor device functionality and collect performance data in-situ
- Patented mass flow sensor* provides exceptional long-term accuracy and zero stability
- 10 µinch electropolished 316L per SEMI F-20 surface finish and metal seals enable PC use for high purity applications

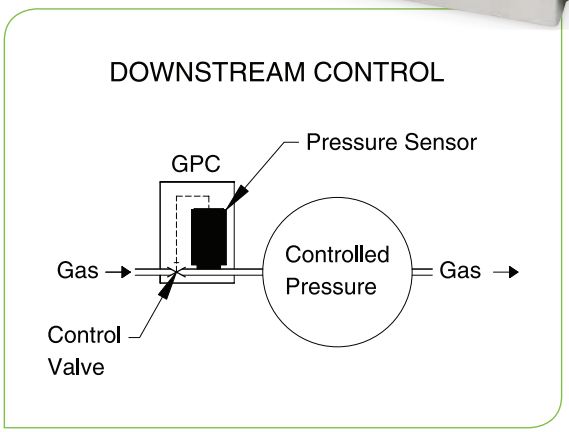

*Protected under the following U.S. patents: No. 5,461,913, No. 6,810,308, No. 7,000,465, or International Patents and Patents pending.

Specifications

Performance

Pressure Type	Absolute
Pressure Full Scale Ranges	500 Torr, 1000 Torr, 2000 Torr, 100 psia
Transducer Over Pressure Limit	2x Full Scale for all ranges
Maximum Differential Pressure	45 psid
Burst Pressure	1500 psig
Flow/Orifice Full Scale Ranges[1]	50, 200, 1000, 5000, 10000, 20000, 30000, 50000 sccm
Control Mode	Downstream
Pressure Measurement Accuracy	±0.5% of Reading
Temperature Coefficients	
Zero	±0.02% of Full Scale/°C
Span	±0.04% of Reading/°C
Pressure Readout Units[2]	Torr, kPa, psi, mbar
Pressure Resolution	0.1 Torr
Pressure Control Accuracy[3]	±1.0% of Reading (≥10% Full Scale) ±0.2% of Full Scale (<10% Full Scale)
Control Range	>2 to 100% of Full Scale
Typical Response Time[4]	<1.0 second
Flow Reading	
Full Scale Flow Rates (N_2 equivalent)	5, 10, 20, 50, 100, 200, 500, 1000, 2000, 5000, 10000, 20000, 30000, 50000
Measurement Range	2% to 100% of F.S.
Accuracy	±1.0% of Reading >20% of Full Scale; ±0.2% of Full Scale (<20% of Full Scale flow) (including non-linearity, hysteresis, and non-repeatability referenced to 760mmHg and 0°C)
Repeatability	±0.3 of Reading
Resolution	0.1% of Full Scale
Temperature Coefficients	
Zero	<0.05% of Full Scale/°C
Span	<0.08% of Reading/°C
Operating Temperature Range	10° to 50°C (50° to 122°F)
Storage Temperature Range	-20° to 80°C (-4° to 176°F)
Storage Humidity Range	0 to 95% relative humidity, non-condensing

[1] Orifice Full Scale ranges are nominal Full Scale flow rates for Nitrogen with 15 psig on the inlet and atmosphere on the outlet side.

[2] Some readout units may not be available over every primary I/O.
[3] Accuracy includes linearity, hysteresis, and repeatability.
[4] Excludes system time constant. Control tuning required for optimum performance.

Mechanical

Fittings	Swagelok® 4 VCR Male, 1-1/8'' surface mount (C-seal, W-seal), ¼'' Swagelok compression seal
Valve Options	
Type	Normally Closed
Seat Material	PTFE (Teflon®)
Leak Integrity	
External (scc/sec He)	$<1 \times 10^{-10}$
Through closed valve	<1.0% of orifice Full Scale (Nitrogen at 25 psig on inlet to atmosphere)
Wetted Materials	
Standard	316L S.S. VAR (equivalent to 316 S.S. SCQ for semiconductor quality), 316 S.S., Elgiloy®, KM-45
Optional (Valve Seat)	PTFE (Teflon)
Surface Finish	<10 µinches, average Ra electropolished
Weight	<3 lbs (1.36 kg)

Note: The pressure controllers require flow to operate, and will not control pressure in “dead-ended” (zero flow) applications.

Digital I/O

DeviceNet™

Input Power Required	+11 to +25 VDC per (<4 watts)
Connector	5 pin micro connector (power and comm.)
Data Rate Switch/Selection	4 positions: 125, 250, 500K (Default), (programmable over network)
Comm. Rate (s)	125 Kbps, 250 Kbps, 500 Kbps
MAC ID Switches/Addresses	2 switches, 10 positions; 0,0 to 6,3, 1 to 254
Network Size	Up to 64 nodes
Visual Indicators	LED Network (green/red), LED Module (green/red)
Compliance	CE

EtherCAT®

Input Power Required	+24 VDC (<5 watts)
Connector	2 x RJ-45 (comm.) male, M8 male, 5 pin (power)
Data Rate Switch/Selection	No switch
Comm. Rate (s)	100 Mbps
Mac ID Switches/Addresses	3 switches, 16 positions
Network Size	Up to 4095 nodes
Visual Indicators	LED Power (green), LED Run (green), LED Error (red), LED Comm (green)
Compliance	CE

RS485

Input Power Required	+15 to +24 VDC (<4 watts)
Connector	9 pin Type D male (power and comm.)
Data Rate Switch/Selection	No switch, Set data rate via RS485
Comm. Rate (s)	9.6 Kbps,19.2 Kbps, 38.4 Kbps
Mac ID Switches/Addresses	Set address over RS485, Station Addresses 0,0 to 9,9
Network Size	Up to 32 nodes
Visual Indicators	LED Comm (yellow), LED Error (red)
Compliance	CE

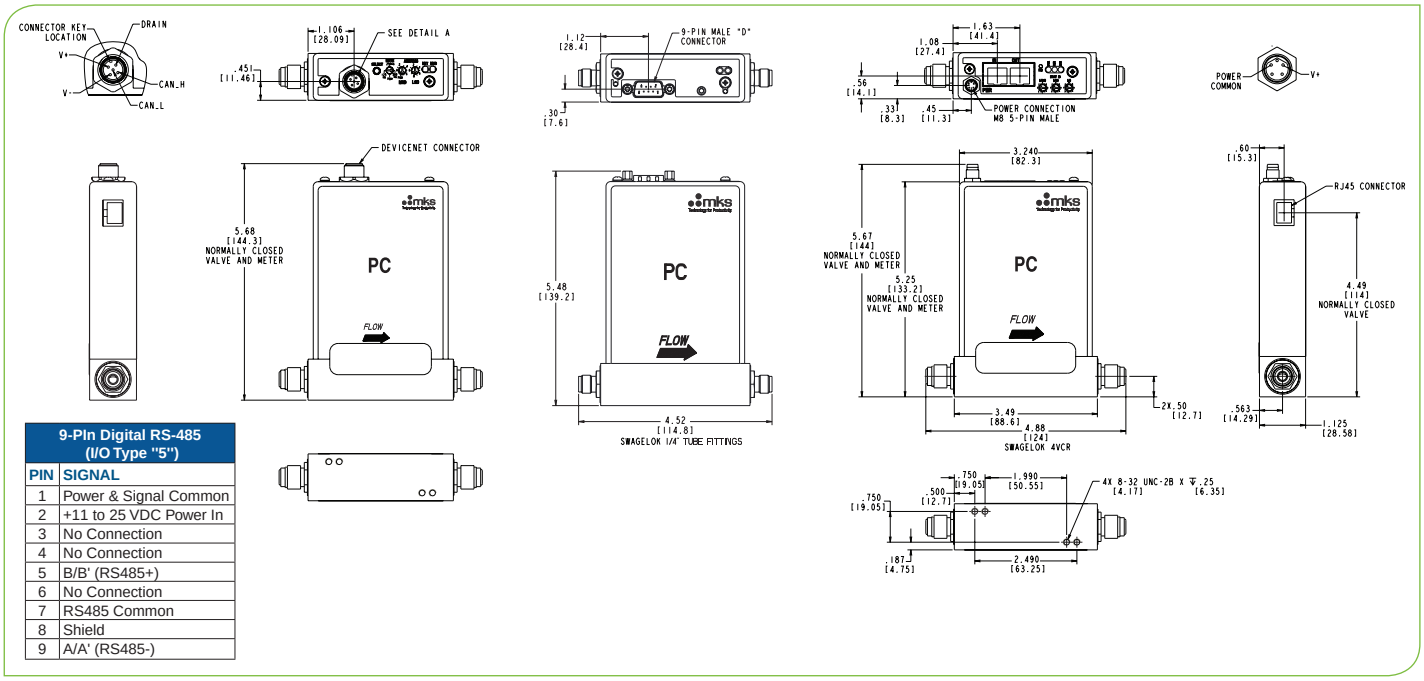

9-Pin Digital RS-485 (I/O Type "5")	
PIN	**SIGNAL**
1	Power & Signal Common
2	+11 to 25 VDC Power In
3	No Connection
4	No Connection
5	B/B' (RS485+)
6	No Connection
7	RS485 Common
8	Shield
9	A/A' (RS485-)

Dimensional Drawing

Note: Unless otherwise specified, dimensions are nominal values in inches (mm referenced).

Ordering Information

Ordering Code Example: GPCMA13T07103R83T110	Code	Configuration
GPCMA Pressure Controller	GPCMA	GPCMA
Pressure Range Full Scale and Units		
500 Torr 1000 Torr 2000 Torr 60 psia 100 psia 1000 mbar 2000 mbar 5000 mbar 100 kPa 200 kPa 600 kPa	52T 13T 23T 61P 12P 13M 23M 53M 12K 22K 62K	13T
Gas		
Helium (001) Argon (004) Hydrogen (007) Nitrogen (013)	01 04 07 13	07
Full Scale Flow Rate (sccm) - (minimum is 5 sccm N_2, equivalent)		
5 10 20 50 100 200 500 1000 2000 5000 10000 20000 30000 50000	500 101 201 501 102 202 502 103 203 503 104 204 304 504	103
Fittings		
Swagelok 4 VCR ¼'' Swagelok C-Seal W-seal (1.125'')	R S C H	R
Electrical Connector		
RS485 (ASCII), 9 pin connector DeviceNet EtherCAT	5 6 8	8
Orifice Size		
A (50 sccm) #1 (200 sccm) #2 (1000 sccm) #3 (5000 sccm) #4 (10,000 sccm) #5 (20,0000 sccm) #6 (30,000 sccm) #7 (50,000 sccm)	A 1 2 3 4 5 6 7	3
Plug Material		
Teflon	T	T
Valve Type		
Normally Closed	1	1
Firmware		
Customer must specify firmware version at time of order.	10	10

www.MKSINST.com
+1-978-645-5500 | +1-800-227-8766

GPCMA_08/19

©2019 MKS Instruments, Inc.
MKS products provided subject to the US Export Regulations. Diversion or transfer contrary to US law is prohibited. Specifications are subject to change without notice. mksinst™ is a trademark of MKS Instruments, Inc., Andover, MA. Swagelok® and VCR® are registered trademarks of Swagelok Marketing Co., Solon, OH. Teflon® is a registered trademark of E.I. Dupont, Wilmington, DE. Elgiloy® is a registered trademark of Elgiloy Limited Partnership, Elgin, IL. DeviceNet™ is a trademark of the Open DeviceNet Vendor Association, Coral Springs, FL. EtherCAT® is a registered trademark and patented technology, licensed by Beckhoff Automation GmbH, Germany.