Pressure & Vacuum Measurement Solutions

WWW.MKSINST.COM

Series 307

VACUUM GAUGE CONTROLLER FOR USE WITH IONIZATION AND CONVECTRON® GAUGES

The Series 307 Vacuum Gauge Controller (VGC) measures pressure, and utilizes pressure-related outputs to control a variety of vacuum system functions and processes. To fit a wide range of needs and applications, the 307 VGC is available in a variety of configurations and prices. The Series 307 VGG runs two ionization gauges sequentially in the range from 1×10^{-10} to 1×10^{-1} Torr. With available modules the 307 controls four gauges, measuring pressure from 2×10^{-11} Torr to atmosphere, and six process control set points.

Features & Benefits

- Capable of pressure measurement at up to four locations in your system or process
- Increased reliability due to conservative design backed by MKS' five-year limited warranty
- Space-saving package design requires only half the conventional rack width

Results From Unique Design Improvements

- Capability to measure pressure: At up to four locations in your system or process using two ionization gauges sequentially and two Convectron Gauges simultaneously.
- Excellent system control: Up to six process control set points are available and can be enabled automatically at pre-selected pressures or manually.
- Increased reliability: Dramatically decreased probability of component failure due to conservative design and cooler operating temperature achieved by removing the separately packaged power supply to a remote location.
- Greater safety: Electric shock danger significantly reduced by using only low voltage circuits in the control unit.
- Improved economy: modular design enables users to purchase only required capabilities and allows for easy upgrades in the future.
- Panel space savings: Only half the conventional rack width is occupied by the 307 control unit. Since no ventilation is required, space above and below the control unit can be used more efficiently.

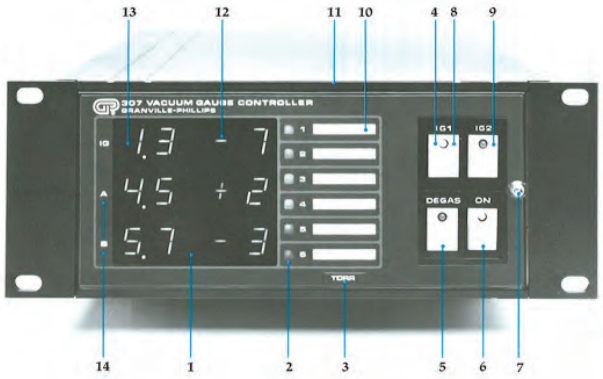

1. All data is easily read from 3-in-1 digital display. One glance gives three simultaneous pressure readings
2. Six available set points provide control of six pressure-related process or system functions: 1, 2 for IG; 3, 4 and 5, 6 for two Convectron gauges.
3. Unit of measure user selectable: Torr, mbar or Pascal.
4. Greater operational safety: IG grid voltage is present only when filament is on.
5. To suit the cleaning requirements of the gauge tube and pressure range, degas is available, either resistive (I^2R) or electron bombardment (EB), specified with order.
6. ON/OFF status clearly indicated by lighted switches.
7. Inside controls protected by latchable front panel.
8. One IG capability included in 307 basic Controller package.
9. Second IG sequential operation.
10. User-labeled set point descriptions.
11. Saves valuable panel space: 8.9 cm (3.5 in.) x 24.1 cm (9.5 in.)
12. All controls/readouts clearly labeled for intuitive operation.
13. Ionization gauge readout.
14. Convectron gauge readouts.

Figure 1 –
Series 307 Control Unit

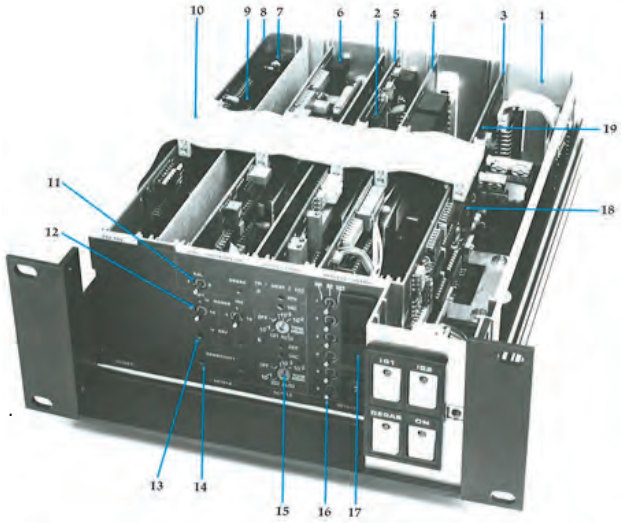

1. Cooler operating temperature since high power-dissipating components are located in the power supply enclosure, not in the control unit.
2. Helps isolate malfunctioning circuits with fault indicators.
3. System control board: voltage regulators, remote and local controls, interface to power supply.
4. Increase process or system control with available control boards for 2 or 6 set points, user selectable.
5. Extend upper pressure measurement with available Convectron gauge board.
6. Electrometer (Standard or UHV).
7. Remote reading of pressure and set point status via available computer interface board: RS-232, RS-485 or IEEE-488.
8. Quick repair and minimal downtime with field-replace able boards.
9. Safer servicing: maximum of 35 volts DC in control unit.
10. Easy field upgrade with removable connectors.
11. Switch allows viewing of emission current or sensitivity calibration.
12. Improve pressure measurement accuracy with constant emission current; three decade range settings: adjustable from 0.01 mA to 10.0 mA.
13. Continuously adjustable emission control.
14. Adjustable IG tube sensitivity settings to calibrate electrometer for various tube sensitivity factors or for direct readout of various gases.
15. Automatically turns the IG on with the IG auto-on control.
16. Take control of process during set-up or system maintenance with manual override switches for each of up to six process channels.
17. Digital set point controls adjustable for any pressure within the range of associated tube. Digital set points are stable and easy to adjust.
18. Power supply status indicators aid troubleshooting.
19. Low-cost boards are practical to inventory.

Figure 2 –
Series 307's clean design provides excellent performance and reliability, intuitive operation, and quick, easy maintenance.

Greater Flexibility in Mounting

- No ventilation space needed above or below control unit.
- Two control units can be mounted in rack space of one conventional controller.
- Power supply can be located anywhere within ten feet of control unit where ventilation is adequate, such as vertically attached to inside wall of system, horizontally on the floor or bottom of system, or rack mounted else where in the panel.

More Accurate Pressure Measurement

- Increased pressure measurement accuracy: by controlling emission current, tube temperature is stabilized, thereby stabilizing thermal transpiration and its effects, outgassing, and wall charges — each of which could otherwise dramatically affect pressure readings.
- For extended pressure range measurement capability and/or prolonged tube life, emission current can be adjusted. (See Fig. 3).
- Studies[1] have shown Bayard-Alpert type gauges to be 30 to 40% inaccurate. Although the 307 VGC will very accurately measure the ion current, these inaccuracies are inherent in the design of the B-A gauge and cannot be consistently compensated for by any IG controller.
- Refer to the Granville-Phillips® Series 370 Stabil-Ion system when better accuracy is required.
- RF immunity
  - High quality shielded cables are used between the control unit and power supply, and to the gauge tubes.
  - To help prevent electrical disturbance, RF filters are used at critical junctions.
- Less circuit drift and greater pressure measurement accuracy are achieved with a lower temperature rise in the instrumentation enclosure by removing the power supply from the vicinity of the control unit.

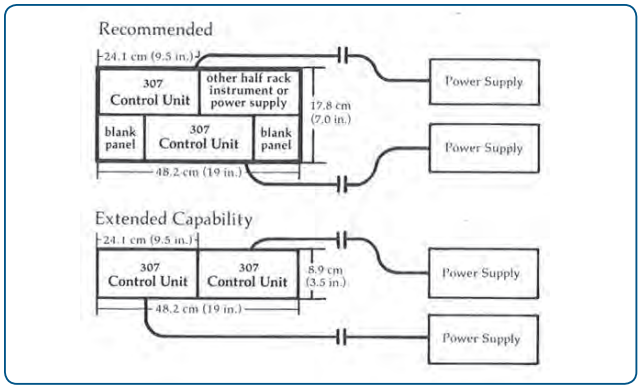

Mounting Options

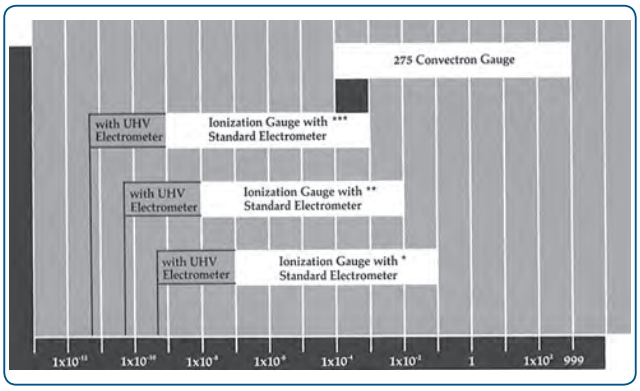

Figure 3 — Operating Range

The 307 VGC measures pressure and controls systems or processes in the entire operating range from 2 x 10^{-11} to 990 Torr. Overlapping Convectron and ionization gauge range for better pressure control. Emission current setting; assumes tube sensitivity of 10/Torr:

**at 0.1 mA*

***at 1.0 mA*

****at 10.0 mA*

[1] C.R. Tilford, J. Vac. Sci. Technol. A 1, 152 (1983); P.A. Redhead, J. Vac. Sci. Technol. 6 848 (1969); K.E. McCulloh and C.R. Tilford, J. Var. Sci. Technol. 18, 994 (1981); K.F. Poulter and C.M. Sutton, Vacuum 31, 147 (1981).

Improved Economy

- Easy customization — design allows purchase of only those modules needed for current application.
- Easy field upgrade to more complex capabilities at a reasonable cost.
- Saves valuable panel space with small size (half-rack width).
- No extra space required for ventilation since low power dissipation of control unit permits mounting against other instruments.
- Minimal downtime
  - Locate failed circuits with the help of fault lights.
  - Boards are easy to inventory since each board contains primarily those circuits relevant to its capability.
  - Easily replaceable modules allow quick in-field repair.

Excellent Control

- Enhanced process control with up to 6 set points: 2 on the ionization gauge and 2 on each of two Convectron gauges.
- Available Convectron gauge capability allows for automatic turn-on of ionization gauge at pre-selected pressure.
- Set points can be overridden manually to facilitate system set-up and maintenance.
- Set point polarity can be user-selected such that relays are activated for pressures either above or below programmed set point.
- Status of set points indicated on front panel; can be identified with user-customized labels.
- Convectron Gauge lower limit of 1 x 10^{-4} Torr, achieved with careful individual zeroing at vacuum, makes this gauge more suitable to control processes such as sputtering in the 1 x 10^{-3} Torr range.

Increased Reliability

- Supported by MKS' five-year limited warranty against defects in materials and workmanship.
- Power-outage protection: all settings are non-volatile so that programmed information is saved in case of power loss or surges. Process control action has selectable relay status so that power-off condition is user-definable. IGs will return to “on” when power recovers, if automatic IG on/off control is in use.
- Damage protection designed-in:
  - Controller protected from short circuits in the gauge tube by special circuitry.
  - Gauge protected from overpressure.
  - Arcs during degas are prevented since plasma build-up causes the control unit to shut down without damage.

Greater Safety

- Dangerous high voltages are removed from IG electrodes when filament power is off.
- Minimized danger of electric shock provided by remote power supply; control unit runs at less than 35 VDC (peak) internally.
- Reduced danger of touching collector lead provided by enclosed cable connector to IG collector. This is important because, the collector, if improperly grounded, can float at near-grid voltage.
- A locking cable strain relief is available for nude gauges.
- Protection from unauthorized operation provided by tamper-resistant design:
  - Available latchable front panel cover helps protect programmed critical data on sub-panel controls from unauthorized tampering.
  - Remote I/O board allows option of rendering front panel IG and degas controls inoperable.

Convenient Multi-Point Measurement Readout

- Readout of six pressure values shown in close proximity by mounting two control units side-by-side. Each control unit is capable of measuring pressure at up to four points in the system. (See Figure 4).

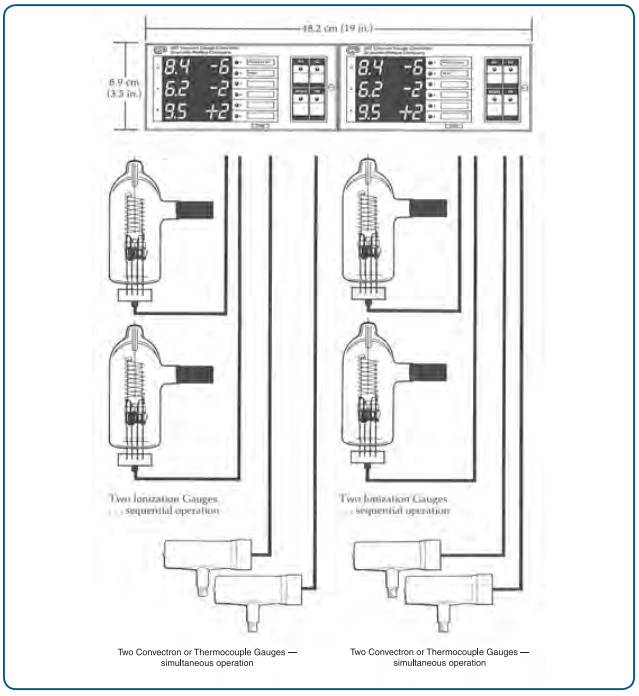

Figure 4 —
Multiple Point Measurement Capability

Specifications

Display	
Type	Digital (green LED)
Units	Torr, mbar, Pascal (user-selectable)
Update time	0.5 second typical
Controller Pressure Range	
Lower Measurement Limit	1×10^{-10} Torr with 10 mA emission and tube sensitivity of 10/Torr
Lower Measurement Limit with UHV	2×10^{-11} Torr with 10 mA emission and tube sensitivity of 25/Torr
Upper Measurement Limit	2×10^{-2} Torr with 0.1 mA emission and tube sensitivity of 10/Torr
Pressure Range	7 decades within above limits for given emission setting and tube sensitivity
Emission Current	Controlled, adjustable from 0.01 to 10.0 mA
Ionization Gauge	Analog output, Logarithmic: 1V/decade, 0-10 VDC
	Bayard-Alpert (B-A) and other compatible hot filament-type nude and glass ionization gauges
Two Ion Gauge Operation	Two hot filament type ionization gauge sequential operation
Remote Input/Output	Provides status relay contacts for IG1, IG2, fault detection
	Provides remote ON/OFF control for IG1, IG2, and degas
	Provides lockout of front panel switches
Degas	Electron Bombardment (EB)*: 10-40 watts adjustable
	Resistive (I^2R): 8V nominal, (fixed) 80 watts maximum
Sensitivity Adjustment Range	3/Torr to 50/Torr
Standard Electrometer	Sensitivity and emission adjustment for IG tube
High-Performance, Ultra-High	Extends pressure readout limit to 2×10^{-11} Torr with 10 mA of emission
Vacuum (UHV) Electrometer	Provides Electron Bombardment Degas power adjustment control
	Contains separate sensitivity adjustments and separate emission controls for independent control of two ion gauges
Cables	3 m (10 ft.), 7.6 m (25 ft.), 15.2 m (50 ft.) or specify up to 61 m (200 ft.)
Control Unit Dimensions	8.9 cm (3.5 in.) high
	24.1 cm (9.5 in.) wide
	27.3 cm (10.75 in.) deep
	[allow +5 cm (+2 in.) depth for connectors]
Power Supply Dimensions	8.9 cm (3.5 in.) high
	20.3 cm (8 in.) wide, without mounting brackets
	24 cm (9.5 in.) deep
Operating Temperature	40°C maximum ambient
Power Input	100/115/230 ±10% VAC (user-specified)
	250 watts
	50 or 60 Hz

** If EB degas is selected the UHV Electrometer is recommended to provide for degas power adjustment independent of emission current settings*

Specifications (Options)

Available Computer Interfaces	IEEE-488 (parallel), RS-232 or RS-485 (serial) Baud rates: 75 (RS-232 only), 150, 300, 600, 1200, 2400, 3600, 4800 or 9600 selectable; 19.2k (RS-485 only) For pressure data output and set point status Provides remote ON/OFF control for IG1, IG2 and degas
High Pressure Operation	Readout resolution to two significant digits over entire range of applicable gauge (except 10^{-4} Torr range)
Convectron Gauge Function	Operates two Granville-Phillips® 275 gauge tubes Pressure range: 1 x 10^{-4} to 990 Torr Keyed connector for easy transducer installation (even in “blind” locations) Analog output, Logarithmic: 1V/decade, 0-7 VDC. Adjustable offset of +1 to -7 VDC.
Process Controls	Two channel (for IG only) Six channel (for all gauges) Pressure-related relays (set points) enabled at user-selected pressures Relay configuration: SPDT (single pole, double throw) Relay contact rating: 250V AC; 5A resistive load 30V DC; 5A Gold plated contacts for low level switching

Model Number Matrix

Choose one of the basic controllers and add the options below to create your catalog number. For example, to order a Series 307 Vacuum Gauge Controller with sequential IG operation, half-rack mount, remote power supply, resistive (I^2R) degas, linear analog output, dual Convectron Gauge operation, 6 set point relays, display in Torr, and North America 115 V power cord, select catalog number: 307501-D1B-T1.

Configured for Series 274 glass tubulated or nude (not UHV) Bayard-Alpert gauges with resistive degas:

Left mount controller, side-by-side with power supply for 19-inch rack	307502 - # # # - # #
Half-rack mount, remote power supply	307501 - # # # - # #

Configured for Series 274 UHV nude Bayard-Alpert gauges with electron bombardment degas, UHV electrometer (reads to $2x10^{-11}$ Torr)

Left mount controller, side-by-side with power supply for 19-inch rack	307508 - # # # - # #
Half-rack mount, remote power supply	307507 - # # # - # #

Interface Options (Slot X):	
None	0
RS-232	A
RS-485	B
IEEE-488	C
Linear Analog Output	D
Gauge Options (Slot Y):	
None	0
Dual Convectron	1
Set Point Options (Slot Z):	
None	0
2 set point relays for ion gauge	A
6 set point relays, 2 per channel	B
6 set point relays, user configurable	C
Display Options - Measurement Units:	
Torr	T
mBar	M
Pascal	P
Power Cord Options:	
North America 115 VAC & Japan 100 VAC	1
North America 240 VAC	2
Universal Europe 220 VAC	3
United Kingdom 240 VAC	4

Option Cards (for field installation)

RS-232 computer interface	307019
RS-485 computer interface	307262
IEEE-488 computer interface	307020
Linear analog output for ionization gauges	307100
Dual Convectron Gauge	307013
Process control with 2 set point relays for ionization gauge	307018
Process control with 6 set point relays, 2 per channel	307017
Remote control interface	307012

Optional Installation Rack-Mount Hardware (for field installation)

Power supply and control unit side-by-side for 19-inch rack	307009
Control unit on the left or right side for 19-inch rack	307010
Control unit in the center of 19-inch rack	307011
2 control units side-by-side for 19-inch rack	307021
1 or 2 power supplies for 19-inch rack	307008
Power supply in half-rack panel	307114

Ordering Information

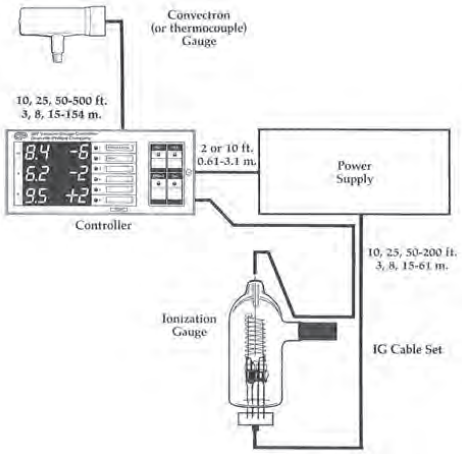

System Interconnect Cables

Notes:
CE = For use with Electron Bombardment (EB) degas
CR = For use with Resistive (I^2R) degas
* = Bakeable to 150°C. For higher temperature bakeable cables, contact MKS Customer Support.

Cables for Tubulated Glass Ionization Gauges	
For side-by-side mounting (XX = 8, 20, 30, 33, 66, 75, 85, 150, or 200 feet)	307045-XX
10 feet (3 meters)	307042
25 feet (7.6 meters)	307043
50 feet (15.2 meters)	307044
For remote mounting of power supply (XX = 02, 05, 20, 40, 100, or 200 feet)	307033-XX
10 feet (3 meters)	307030
25 feet (7.6 meters)	307031
50 feet (15.2 meters)	307032
Cables for Nude Ionization Gauges	
With push-on pins, side-by-side mounting (XX = 150, or 200 feet)	307049-XX
10 feet (3 meters)	307046
25 feet (7.6 meters)	307047
50 feet (15.2 meters)	307048
75 feet (22.9 meters)	307249
With push-on pins, remote mounting of power supply	
10 feet (3 meters)	307034
25 feet (7.6 meters)	307035
50 feet (15.2 meters)	307036
With pin guard/locking strain relief for EB degas, side-by-side mounting (XX = 10, 15, 25, 35, 50, 66, 82, 100, 115, or 200 feet)	307049-CE-XX*
10 feet (3 meters)	307046-CE*
25 feet (7.6 meters)	307047-CE*
50 feet (15.2 meters)	307048-CE*
With pin guard/locking strain relief for EB degas, remote mounting of power supply	
10 feet (3 meters)	307034-CE*
25 feet (7.6 meters)	307035-CE*
50 feet (15.2 meters)	307036-CE*
75 feet (22.9 meters)	307037-CE*-75
With pin guard/locking strain relief for resistive degas, side-by-side mounting	
10 feet (3 meters)	307046-CR*
25 feet (7.6 meters)	307047-CR*
50 feet (15.2 meters)	307048-CR*
30 feet (9.1 meters)	307049-CR*-30
With pin guard/locking strain relief for resistive degas, remote mounting of power supply	
10 feet (3 meters)	307034-CR*
25 feet (7.6 meters)	307035-CR*
50 feet (15.2 meters)	307036-CR
Cables for:	
Dual Convectron Gauges	
10 feet (3 meters)	303040-10
25 feet (7.6 meters)	303040-25
50 feet (15.2 meters)	303040-50
100 feet (30.5 meters)	303040-100
200 feet (61 meters)	303040-200
IEEE-488	
3.3 feet (1 meter)	303042
6.6 feet (2 meters)	303043
13.2 feet (4 meters)	303044

MKS Instruments, Inc.
Global Headquarters
2 Tech Drive, Suite 201
Andover, MA 01810
Tel: 978.645.5500
Tel: 800.227.8766 (in USA)
Web: www.mksinst.com

MKS Instruments, Inc.
Pressure & Vacuum Measurement Solutions
6450 Dry Creek Parkway
Longmont, CO 80503
Tel: 303.652.4400

Series 307 - 1/19
© 2014-2019 MKS Instruments, Inc.
All rights reserved.

MKS products provided subject to the US Export Regulations. Diversion or transfer contrary to US law is prohibited. Specifications are subject to change without notice. Granville-Phillips® and Convectron® are registered trademarks, and mksinst™ is a trademark of MKS Instruments, Inc.