Pressure & Vacuum Measurement Solutions

WWW.MKSINST.COM

835 VQM® DPS

VQM® DIFFERENTIAL PUMP SYSTEM

The Differential Pump System extends the vacuum pressure range of the award-winning, high performance Vacuum Quality Monitor (VQM). All the benefits of the VQM, including speed and ease of use, can now be used in process monitoring and process control applications.

The 835 Differential Pump System (DPS) provides real-time information that can be used to optimize PVD, ion implant, coating, and other vacuum processes to increase productivity, improve results, and save money.

Typical usage includes:

- Monitoring gas reactions
- Determining when to start a process
- Detecting contaminants
- Controlling the amount of reactive gas introduced
- Leak detection

Features & Benefits

- Operation from 3 Torr to 5×10^{-9} Torr
- 1–145 amu partial pressure measurement information in 85 ms; 1–300 amu range also available
- Instant information on the 10 most prevalent gases including trend graphs
- Accurate hydrogen and helium measurements (no zero blast)
- Data logging at 85 ms sample rates
- Easy single-gas calibration using a gas already in your vacuum system
- Compact design allows for flexible mounting

Description

VQM® Technology and Uses

Autoresonant ion trap mass spectrometer technology represents an entirely new way of mass selectively ejecting ions from an electrostatic ion trap. The 835 VQM mass spectrometer gauge is natively a ratiometric measurement device that provides detailed compositional analysis of a gas mixture.

Theory of Operation

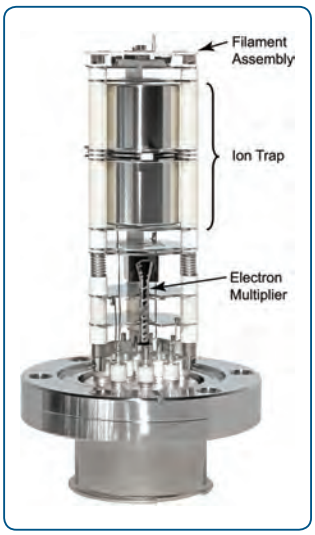

The ionizer is a filament assembly that generates ions directly inside the ion trap through electron impact ionization of gas molecules. An electrostatic field traps the ions, and they oscillate at their natural frequency within the ion trap. The frequency of oscillation is inversely proportional to the square root of their mass-to-charge ratio – i.e. lighter ions oscillate at higher frequencies than heavier ions. The ions are ejected through an autoresonant energy pumping process using a low amplitude RF scan. An electron multiplier collects the ejected ions and produces a current proportional to the ion concentration.

Standard System Setup

The 835 DPS complete system includes the following components:

- 835 VQM Partial Pressure Gauge
- 390802 Micro-Ion Total Pressure Gauge
- Bypass Gate Valve with Orifice
- Turbo Pump
- Roughing Pump with Hose
- Interconnect Cables
- VQM Controller
- VQM Viewer Software

Field Replaceable Orifice, Filament, and Electron Multiplier Assemblies

The orifice, filament, and electron multiplier are easily replaced by your own service technicians. Replacement kits provide everything needed – including easy-to-follow instruction guides – to assure quick, simple, and cost effective replacement, as well as maximizing system uptime.

Simple Calibration

Calibration can be completed in seconds with just a few clicks of the mouse using any single gas that is already in your vacuum system.

Differential Pumping Operation

A pressure differential between the vacuum chamber and the VQM gauge is achieved by limiting the conductance to the sensor using an orifice in the gate valve and pumping the sensor with a turbo pump. The orifice size is specified based on the pressure in the vacuum chamber. The bypass gate valve can be opened during base out if the chamber is below 10^{-5} Torr. If base out is above $1x10^{-5}$ Torr, the bypass valve is not needed. The bypass valve can be controlled manually or electronically. An optional isolation valve can be used to isolate the entire differentially pumped system from your vacuum chamber when venting the chamber or when gas analysis is not needed.

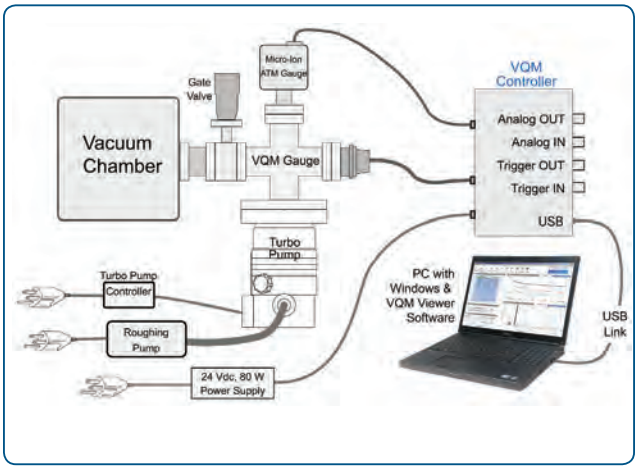

Standard VQM Differential Pump System Setup

Specifications

VQM® Viewer Software Highlights

- Intuitive graphical user interface
- Displays the top 10 gases in the vacuum chamber
- Single gas calibration
- Mass spectrum output
- Pressure vs. time trend display
- Leak detection with graphic display
- DSP for noise reduction and peak finding
- Logging of data
- Advanced settings and tuning functions
- Built-in contextual help files

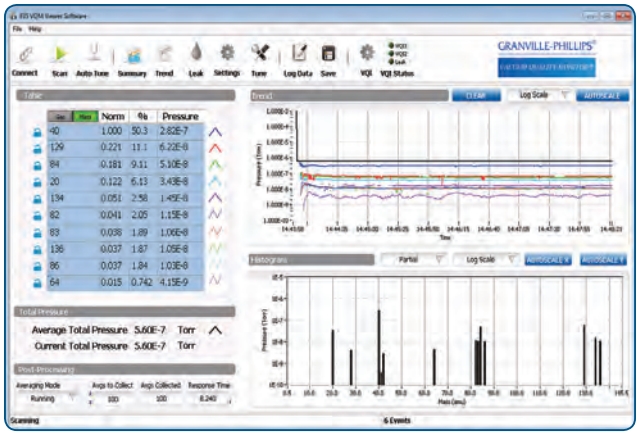

VQM Viewer Software Summary Screen

Specifications

835 VQM® Differential Pump

Operating Range	3 Torr to 10^{-5} Torr through orifice, to $5x10^{-9}$ Torr through bypass gate valve
Mass Range	1 to 145 amu or 1 to 300 amu
Resolution (m/Δm)	120 Full Width Half Maximum (FWHM), 180 resolution for the 300 amu system
Dynamic Range	2 decades for single scan, 3 or more with averaging
Response Time	85 ms (1–145 amu) or 120 ms (1-300 amu)
Operating Temperature	5°C to 40°C (41 °F to 104 °F), non-condensing
Mounting Flange	2.75 inch ConFlat® type
Physical Dimensions	43.52 cm high (17.13 inches)
Weight	10.88 Kg (24 pounds) plus the weight of the gate valve
Materials Exposed to Process Environment	304L Stainless Steel, 316L Stainless Steel, Alumina Ceramic, Al2O3 98% Min., Nickel, Molybdenum, Ag/Cu eutectic braze, Gold, Iridium, Yttria, Y2O3 99.95%, Lead Glass (multiplier body), Chromium, Viton, Copper
Compliance	CE

VQM® Viewer Software Computer Requirements

Parameter	Minimum
Processor/Memory	Intel® Core™ 2 Duo T7250 @ 2 GHz with 2.56 GB of RAM or equivalent
Display Resolution	Minimum: 1366 x 768 pixels, larger to take advantage of resizing
Operating System	Windows 7 (32 or 64 bit), Windows® XP (32 bit) SP2, .NET 3.5 Framework SP1 (provided)
Disk Space	Minimum: 1.6 GB (more needed for large Log files)
Optional Development Environment	API and LabVIEW VIs provided for VQM interfacing. Contact MKS for development version requirements.

Minimum requirements are for one PC connected to one VQM controller. Four or eight core systems are recommended when driving multiple controllers.

Ordering Information

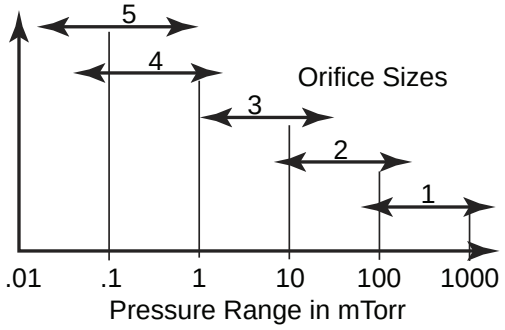

Pressure Range Chart

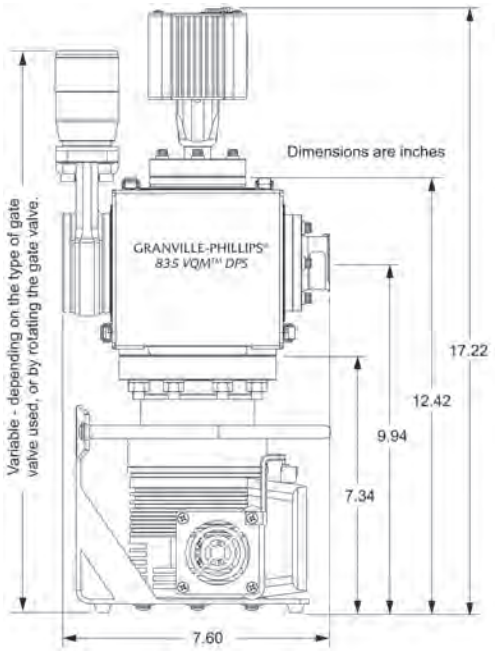

Dimensional Drawing —

Note: Unless otherwise specified, dimensions are nominal values in inches.

Model Number Matrix

835 VQM Differential Pump System

Differential Pumping System, Gauge, Cross Fitting, Turbo Pump, Roughing Pump, Orifice, Total Pressure Gauge, Power Supply & Cord		835901-DPS - # # # - #(*)
Pressure Range 90 mTorr to 3000 mTorr	Orifice size 1	
Pressure Range 9 mTorr to 350 mTorr	Orifice size 2	
Pressure Range 1 mTorr to 45 mTorr	Orifice size 3	
Pressure Range .05 mTorr to 2.2 mTorr	Orifice size 4	
Pressure Range .02 mTorr to 1 mTorr	Orifice size 5	
No Bypass Valve	N	
Manual Valve	M	
Pneumatic Valve (24VDC)	P	
Mass Range AMU 1-145	1	
Mass Range AMU 1-300	3	
Power Cord (*) (see below)	#	

(*) # -1 = North American 115 VAC & Japan 100 VAC, -2 = North American 240 VAC, -3 = Universal European 220 VAC, -4 = United Kingdom 240 VAC

835 VQM Controller and Software

Controller, Single Gauge, Benchtop Mount, USB 2.0, No Set Points, Power Supply & Cord	835500-U # - #(*)
Mass Range AMU 1-145	1
Mass Range AMU 1-300	3
Power Cord (*) (see above)	#
Cable - VQM Controller to Gauge	835300- ## M
1 meter (3.28 ft) long	01
3 meters (9.84 ft) long	03
Cable - VQM Controller to 390 Micro-Ion® ATM Module	802301- ## M
1 meter (3.28 ft) long	01
3 meters (9.84 ft) long	03
CD - 835 VQM Software Suite (Viewer Application Software, LabVIEW VI)	835400

835 VQM Differential Pumping Options

KF40 Adapter Kit	801210-K
Isolation Valve Kit	801700- # - K
Manual Valve	M
Pneumatic Valve	P
Hardware/Bolt Kit includes 6 flange bolts & washers, 3 plate nuts, and 1 copper gasket	801274-1
Field Replaceable Filament Assembly Kit	830105-Y-K
Field Replaceable Electron Multiplier Kit	835110-K
Orifice for Gate Valve	801211- #
Orifice for when no Gate Valve is used	801212- #
Bolt Kit for Orifice when no Gate Valve is used	801207-K

 # = size of orifice (1 through 5) - see above

MKS Instruments, Inc.
Global Headquarters

2 Tech Drive, Suite 201
Andover, MA 01810

Tel: 978.645.5500
Tel: 800.227.8766 (in USA)
Web: www.mksinst.com

MKS Instruments, Inc.
Pressure & Vacuum Measurement Solutions

6450 Dry Creek Parkway
Longmont, CO 80503

Tel: 303.652.4400

835 VQM Diff Pump System - 3/18

© 2014-2018 MKS Instruments, Inc.
All rights reserved.

MKS products provided subject to the US Export Regulations. Diversion or transfer contrary to US law is prohibited. Specifications are subject to change without notice.
Granville-Phillips® and VQM® are registered trademarks, and mksinst™ is a trademark of MKS Instruments, Inc. ConFlat® is a registered trademark of Varian Associates. Intel® is a registered trademark of Intel Corporation. Windows® is a registered trademark of Microsoft Corporation.