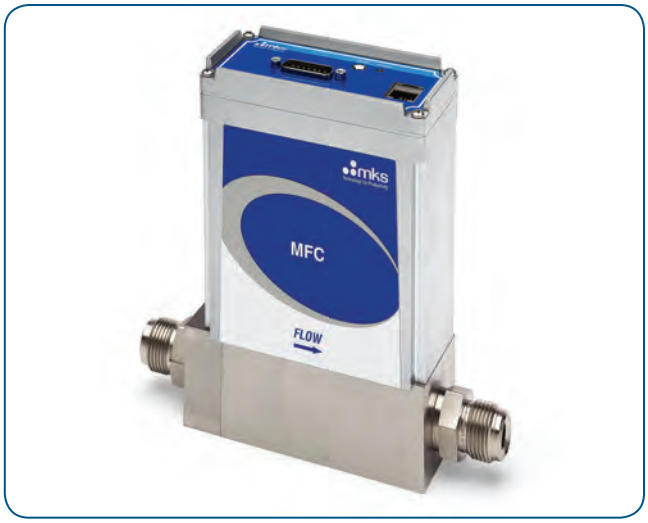

Flow Solutions

WWW.MKSINST.COM

GE300A

MULTI-GAS/MULTI-RANGE MASS FLOW CONTROLLER FLOW RATES UP TO 300 SLM

The GE300A is a general purpose, elastomer sealed MFC well suited for a wide variety of applications requiring flow control capability from 150 slm to 300 slm Full Scale, N_2 equivalent. The GE300A incorporates the latest in digital flow control electronics along with a well proven, patented thermal sensor and mechanical design. This MFC is available with either analog or digital I/O. The digital control electronics utilize the latest in MKS control algorithms provide fast and repeatable response to set point.

Settling times of 1 to 2 seconds and set point accuracies below 1% of set point outperform those of other typical high flow MFCs. Precise control is maintained down to 2% of the GE300A configured Full Scale flow range. The multi-gas/multi-range capability, along with tight performance specifications for accuracy, control range, and transient response allow users to minimize inventory of high flow MFC part numbers.

The multi-gas/multi-range feature (along with other custom controls) is accessed through the MFCs embedded diagnostic interface, which requires no special software or hardware to operate. A standard Ethernet cable and JAVA-enabled HTML browser, widely available, are all the tools needed. The critical gas parameters for typical high flow rate gases are already stored on the device. Configuring the device is simply a matter of selecting the gas from a drop down menu and specifying the desired full scale flow range. The diagnostic interface also allows the user to perform routine device health checks, plot flow response, and store operating data for offline analysis.

Features & Benefits

Improved Performance

- Fast response to set point change reduces flow stabilization time for short process steps, enhancing process throughput
- Tightly controlled flow accuracy of process gas enables improved process matching
- Reduced inlet pressure (pressure drop) requirement simplifies gas supply regulation from a single source

Reduces Overall Costs

- Reduces MFC inventory through its multi-gas/multi-range capability
- Accurate flow control over a wide dynamic range, even when down ranged, reduces need for an additional low range MFC

Easy to Integrate and Operate

- Device configuration and diagnostics made simple through standard Ethernet interface
- Uses a standard web browser with no special software required

Performance

Full Scale Flow Ranges *(N_2 equivalent)*	150 to 300 slm
Maximum Inlet Pressure	150 psig (cannot exceed pressure differential requirement across MFC)
Normal Operating Pressure Differential *(with atmospheric pressure at the MFC outlet)*	30 to 55 psid (dependent on fitting type)
Burst Pressure	1500 psig
Control Range	2% to 100% of Full Scale (range on mech.)
Typical Accuracy	± 1% of set point for > 20% to 100% Full Scale ± 0.25% of Full Scale for 5% to 20% Full Scale
Repeatability	± 0.5% of Reading
Resolution	0.1% of Full Scale
Temperature Coefficients	
Zero	< 0.05% of Full Scale/°C
Span	< 0.08% of Reading/°C
Inlet Pressure Coefficient	< 0.03% of Reading/psi or less
Typical Controller Settling Time	1 to 2 seconds typical above 10% Full Scale @ 50 psi
Warm-up Time	One (1) hour
Operating Temperature Range *(Ambient)*	10°C to 50°C
Storage Humidity	0 to 95% relative humidity, non-condensing
Storage Temperature	-20° to 65°C (-4° to 149° F)

Mechanical

Fittings *(compatible with)*	8 VCO® male, ½" NPT female, ½" Compression, 8 VCR® male
Leak Integrity	
External (scc/sec He)	< 1 x 10^{-9}
Through closed valve	< 1.0% Full Scale at 40 psia to vac (<500 mTorr) (To assure no flow-through, a separate positive shut-off valve is required.)
Wetted Materials	
Standard	316 S.S., 17-7 S.S., Elgiloy®, 430FR
Seal Options	Viton®, Buna, Neoprene®, EPDM
Surface Finish	16 µinch average Ra
Weight	less than 4.5 lbs. (2.05 kg)

Electrical Analog I/O

Input Power Required	+15 to +24 VDC @ (< 4 watts)
Flow Input/Output Signal	
Voltage (0 to 5 VDC)	15-pin Type "D" male
Current (4 to 20 mA)	15-pin Type "D" male
Compliance	CE

Digital I/O

	DeviceNet™	**Profibus®**
Input Power Required	+11 to +25 VDC per (< 4 watts)	+15 to +24 VDC (< 4 watts)
Connector	5 pin micro connector (power and comm.)	9 pin Type D male (power) 9 pin Type D female (comm.)
Data Rate Switch/Selection	4 positions: 125, 250, 500K, (Default) (programmable over network)	No switch Set data rate via Profibus
Comm. Rate(s)	125 Kbps, 250 Kbps, 500 Kbps	9.6 Kbps to 12 Mbps
MAC ID Switches/Addresses	2 switches, 10 positions; 0,0 to 6,3 1 to 254	2 switches, 10 positions
Network Size	Up to 64 nodes	Up to 99 nodes
Visual Indicators	LED Network (green/red) LED Module (green/red)	LED Comm (green/red) LED Error (green/red)
Compliance	CE	CE

Dimensional Drawing

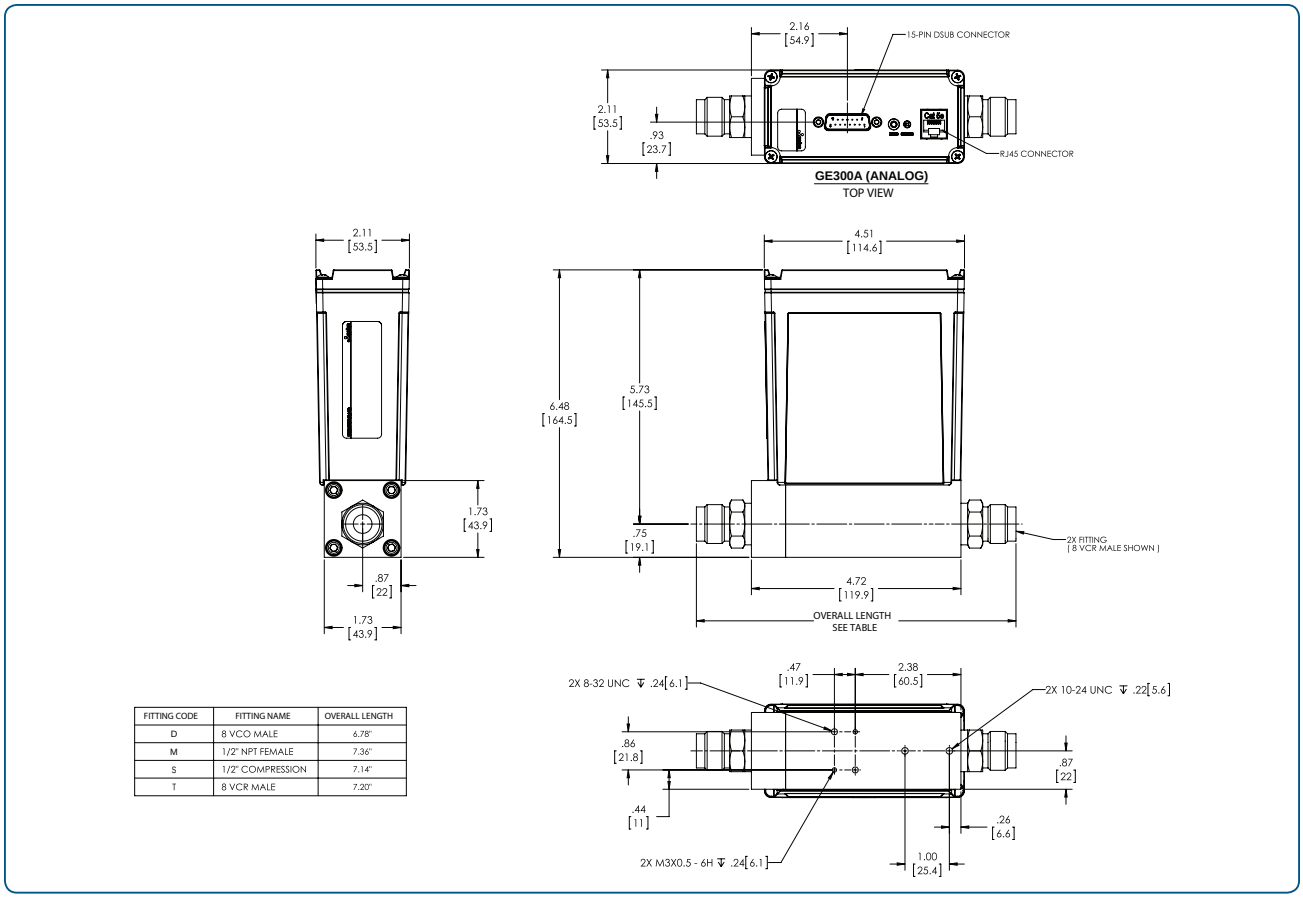

FITTING CODE	FITTING NAME	OVERALL LENGTH
D	8 VCO MALE	6.78"
M	1/2" NPT FEMALE	7.36"
S	1/2" COMPRESSION	7.14"
T	8 VCR MALE	7.20"

Dimensional Drawing

Note: Unless specified, dimensions are nominal values in inches (mm referenced).

Ordering Information

Ordering Code Example: GE300A013305TBV0020	Code	Configuration
MFC High Flow Mass Flow Controller (multigas, multi-range) GE300A		GE300A
Gas*		
For example: 001 = Helium = He 004 = Argon = Ar 007 = Hydrogen = H_2 013 = Nitrogen = N_2	 001 004 007 013	013
Flow Range Full Scale**		
300 slm (300,000 sccm)	305	305
Fittings *(compatible with)*		
8 VCR male 8 VCR male (1559 replacement) 8 VCO male 12 mm tube compression 1/2" tube compression 1/2" tube compression (1559 replacement) 3/8" tube compression 1/2" NPT female	T L D F S W J M	T
Connector (Power & Control I/O)		
15 pin D (Analog 0 to 5 VDC I/O) 15 pin D (4 to 20 mA I/O) Profibus (1480 Compatible) Profibus (1179B Compatible) RS-485 DeviceNet	B H 4 3 5 6	B
Seal Materials		
Viton Buna-N Neoprene EPDM	V B N E	V
Valve Type		
Normally closed Meter	0 3	0
Reserved for MKS Future Use		
Standard	0	0
Firmware		
Unless otherwise specified, MKS will ship firmware revision current to date	20	20

* For gases not listed in the standard products gas table, please contact the MKS applications department for assistance.

Gas Table

Gas Name*	Semi Gas Code	Gas Formula	Min - Max Full Scale (slm)
Helium	001	He	210 to 300
Argon	004	Ar	135 to 270
Hydrogen	007	H_2	150 to 300
Air	008	Air	150 to 300
Nitrogen	013	N_2	150 to 300

** The Full Scale flow rate is designated by a 3 digit number. The first two digits represent the significant digits of the Full Scale flow rate separated by a decimal point. The third digit is the exponent of the power of ten.

Example flow rate code:
255 is 2.5 x 10^5 sccm or 250 slm
105 is 1.0 x 10^5 sccm or 100 slm

MKS Instruments, Inc.
Global Headquarters

2 Tech Drive, Suite 201
Andover, MA 01810

Tel: 978.645.5500
Tel: 800.227.8766 (in U.S.A.)
Web: www.mksinst.com

MKS Instruments, Inc.
Flow Solutions

Six Shattuck Road
Andover, MA 01810

Tel: 978.975.2350

GE300A - 3/19

© 2017-2019 MKS Instruments, Inc.
All rights reserved.

MKS products provided subject to the US Export Regulations. Diversion or transfer contrary to US law is prohibited.

Specifications are subject to change without notice. mksinst™ is a trademark of MKS Instruments, Inc., Andover, MA. VCR® and VCO® are registered trademarks of Swagelok Marketing Co., Solon, OH. Viton® and Neoprene® are registered trademarks of E.I. Dupont Company, Wilmington, DE. Elgiloy® is a registered trademark of Elgiloy Specialty Metals, Elgin, IL. DeviceNet™ is a trademark of the Open DeviceNet Vendor Association, Coral Springs, FL. Profibus® is a registered trademark of Profibus International, Karlsruhe, Germany.