Series 943

Cold Cathode Vacuum Sensor System

Instruction Manual

Instruction manual part number 100009887
Revision D - May 2020


943 COLD CATHODE
PRESSURE
2.3
TORR
X 10
-7
O I
POWER
mks
H.V. ON
H.V. OFF
REMOTE
VIEW SET POINT 1
SET
VIEW SET POINT 2
SET
VIEW SET PROTECT

Series 943

Cold Cathode Vacuum Sensor System

This instruction manual is for use with Series 943 Cold Cathode Vacuum Sensor System. A list of applicable catalog numbers is provided on the following page.

Customer Service / Technical Support:

MKS Global Headquarters
2 Tech Drive, Suite 201
Andover MA, 01810 USA
Phone: +1-833-986-1686
Email: insidesales@mksinst.com
Visit our website at www.mksinst.com

Instruction Manual

Series 943 Cold Cathode Vacuum Sensor System

Catalog numbers for Series 943 Cold Cathode Vacuum Sensor System

943-A-120V50-PA-PC

943-A-120V50-TR-NA

943-A-120V50-TR-PC

943-A-120V60-PA-PC

943-A-120V60-TR-PC

943-A-120V60-TR-PC-01

943-A-120V60-TR-PC-02

943-A-120V60-TR-NA

943-A-220V50-PA-PC

943-A-220V50-TR-NA

943-A-220V50-TR-PC

943-A-220V60-PA-PC

943-A-220V60-TR-NA

943-A-220V60-TR-PC

943-A-220V60-PA-PC-02

Table of Contents

Chapter 1

General Information

1.1 Receiving Inspection

On receipt of the equipment, inspect all material for damage. Confirm that the shipment includes all items ordered. If items are missing or damaged, submit a claim as stated below for a domestic or international shipment, whichever is applicable.

If materials are missing or damaged, the carrier that made the delivery must be notified within 15 days of delivery, or in accordance with Interstate Commerce regulations for the filing of a claim. Any damaged material including all containers and packaging should be held for carrier inspection. Contact MKS Instruments, Inc. Customer Support for assistance if your shipment is not correct for reasons other than shipping damage.

1.2 International Shipment

Inspect all materials received for shipping damage and confirm that the shipment includes all items ordered. If items are missing or damaged, the airfreight forwarder or airline making delivery to the customs broker must be notified within 15 days of delivery. The following illustrates to whom the claim is to be directed.

- If an airfreight forwarder handles the shipment and their agent delivers the shipment to customs, the claim must be filed with the airfreight forwarder.
- If an airfreight forwarder delivers the shipment to a specific airline and the airline delivers the shipment to customs, the claim must be filed with the airline.

Any damaged material including all containers and packaging should be held for carrier inspection. Contact MKS Customer Support for assistance if your shipment is not correct for reasons other than shipping damage.

1.3 Warranty

MKS Instruments, Inc. provides an eighteen (18) month warranty from the date of shipment for new MKS Products. The MKS Instruments, Inc. General Terms and Conditions of Sale provides the complete and exclusive warranty for MKS products. This document is located on our web site at www.mksinst.com, or may be obtained by contacting an MKS Customer Service Representative.

1.4 Certification

MKS Instruments, Inc. certifies that this product met its published specifications at the time of shipment from the factory.

1.5 Customer Service / Technical Support

Some minor problems are readily corrected on site. If the product requires service, contact the MKS Technical Support Department at +1-833-986-1686. If the product must be returned to the factory for service, request a Return Material Authorization (RMA) from MKS. Do not return products without first obtaining an RMA. In some cases a hazardous materials disclosure form may be required. The MKS Customer Service Representative will advise you if the hazardous materials document is required.

When returning products to MKS, be sure to package the products to prevent shipping damage. Shipping damage on returned products as a result of inadequate packaging is the Buyer's responsibility.

For Customer Service / Technical Support:
MKS Global Headquarters
2 Tech Drive, Suite 201
Andover MA, 01810 USA
Phone: +1-833-986-1686
Email: insidesales@mksinst.com
Visit our website at: www.mksinst.com

Chapter 2
Safety

2.1 Safety Introduction

START BY READING THESE IMPORTANT SAFETY INSTRUCTIONS AND NOTES collected here for your convenience and repeated with additional information at appropriate points throughout this instruction manual.

These safety alert symbols in this manual or on the Product mean caution - personal safety, property damage or danger from electric shock. Read these instructions carefully.

DANGER	Danger indicates a hazardous situation which, if not avoided, **will result in death or serious injury.**
WARNING	Warning indicates a hazardous situation which, if not avoided, **could result in death or serious injury**.
CAUTION	Caution indicates a hazardous situation or unsafe practice which, if not avoided, **may result in minor or moderate personal injury**.
NOTICE	Indicates a situation or unsafe practice which, if not avoided, **may result in equipment damage**.

Notice

These instructions do not and cannot provide for every contingency that may arise in connection with the installation, operation, or maintenance of this product. If you require further assistance, contact MKS.

This product was designed and tested to offer reasonably safe service provided it is installed, operated, and serviced in strict accordance with these safety instructions.

WARNING

Safety Precautions

Failure to comply with these instructions may result in serious personal injury, including death, or property damage.

Always observe and follow all safety notices that are provided throughout this instruction manual and on the product.

These safety precautions must be observed during all phases of operation, installation, and service of this product. Failure to comply with these precautions or with specific warnings elsewhere in this manual violates safety standards of design, manufacture, and intended use of the instrument. MKS disclaims all liability for the customer's failure to comply with these requirements.

- *Read Instructions* – Read all safety and operating instructions before operating the product.
- *Retain Instructions* – Retain the Safety and Operating Instructions for future reference.
- *Heed Warnings* – Adhere to all warnings on the product and in the operating instructions.
- *Follow Instructions* – Follow all operating and maintenance instructions.
- *Accessories – Do not* use accessories not recommended in this manual as they may be hazardous.

WARNING

Electrical Shock or Personal Injury

The service and repair information in this manual is for the use of Qualified Service Personnel. To avoid possible electrical shock or personal injury, do not perform any procedures in this manual or perform any servicing on this product unless you are qualified to do so.

WARNING

Electrical Shock or Fire

To reduce the risk of fire or electric shock, do not expose this product to rain or moisture.

Objects and Liquid Entry - Never push objects of any kind into this product through openings as they may touch dangerous voltage points or short out parts that could result in a fire or electric shock. Be careful not to spill liquid of any kind onto the products.

2.2 Responsibility

It is the responsibility of the Customer to comply with all local, state, and federal ordinances, regulations, and laws applicable to the installation, operation and service of this equipment.

It is the responsibility of the end user to provide sufficient lighting at work to meet local regulations.

Operation and Service of this equipment in strict accordance with the methods and procedures supplied by MKS is the responsibility of the Customer.

MKS assumes no liability, whatsoever, for any personal injuries or damages resulting from the operation or service of this equipment in any manner inconsistent or contrary to the methods supplied in MKS literature including, but not limited to, manuals, instructions, bulletins, communications, and recommendations.

For emergencies and for product safety related matters, contact the MKS Customer Service Department. See Section 1.5 or Section 6.6 for detailed information regarding how to contact MKS Customer Service Representatives.

2.3 Grounding Requirements

See Grounding, Section 4.1.2 in the Installation chapter for more detailed requirements regarding gauge and system grounding.

WARNING

Proper Grounding

All components of a vacuum system used with this or any similar high voltage product must be maintained at Earth ground for safe operation.

Be aware that grounding this product does not guarantee that other components of the vacuum system are maintained at Earth ground.

Verify that the vacuum port to which the sensor is mounted is electrically grounded. It is essential for personnel safety as well as proper operation that the envelope of the gauge be connected to a facility ground.

Connect power cords only to properly grounded outlets or sources.

Grounding is very important! Be certain that ground circuits are correctly used on your ion gauge power supplies, gauges, and vacuum chambers, regardless of their manufacturer. Safe operation of vacuum equipment requires grounding of all exposed conductors of the gauges, the controller and the vacuum system. LETHAL VOLTAGES may be established under some operating conditions unless correct grounding is provided.

Ion producing equipment, such as ionization gauges, mass spectrometers, sputtering systems, etc., from many manufacturers may, under some conditions, provide sufficient electrical conduction via a plasma to couple a high voltage electrode potential to the vacuum chamber. If exposed conductive parts of the gauge, controller, and chamber are not properly grounded, they may attain a potential near that of the high voltage electrode during this coupling. Potential fatal electrical shock could then occur because of the high voltage between these exposed conductors and ground.

2.4 High Voltage

High Voltage is present in the unit when electrical power is applied to the electronics enclosure. Hazardous voltages may still be present for some time after disconnecting power to the electronics enclosure. Refer to the Installation and Service chapters for more information.

WARNING

High Voltage

Be aware that when high voltage is present in any vacuum system, a life threatening electrical shock hazard may exist unless all exposed conductors are maintained at Earth ground.

This hazard is not unique to this product.

WARNING

High Voltage

All conductors in, on, or around the vacuum system that are exposed to potential high voltage electrical discharges must either be shielded at all times to protect personnel or must be connected to Earth ground at all times.

WARNING

High Voltage

Be aware that an electrical discharge through a gas may couple dangerous high voltage directly to an ungrounded conductor almost as effectively as would a copper wire connection. A person may be seriously injured or even killed by merely touching an exposed ungrounded conductor at high potential.

This hazard is not unique to this product.

CAUTION

Do not connect or disconnect any electrical connectors while power is applied to the equipment (hot swapping). Doing so may cause damage to the equipment or severe electrical shock to personnel. This hazard is not unique to this product.

2.5 Over Pressure Conditions

WARNING

Explosive Environment

Do not use the Series 943 Vacuum Sensor System in an environment of explosive or combustible gases or gas mixtures. Operation of any electrical instrument in such an environment constitutes a definite safety hazard. Do not use the product to measure the pressure of explosive gases or gas mixtures.

WARNING

Potential Automatic Operation

It is the installer's responsibility to ensure that the automatic signals provided by the product are always used in a safe manner. Carefully check the system programming before switching to automatic operation.

WARNING

Vacuum Chamber High Pressures

Where an equipment malfunction could cause a hazardous situation, always provide for fail-safe operation. As an example, in an automatic backfill operation where a malfunction might cause high internal pressures, provide an appropriate pressure relief device.

Danger of injury to personnel and damage to equipment exists on all vacuum systems that incorporate gas sources or involve processes capable of pressuring the system above the limits it can safely withstand.

For example, danger of explosion in a vacuum system exists during backfilling from pressurized gas cylinders because many vacuum devices such as ionization gauge tubes, glass windows, glass belljars, etc., are not designed to be pressurized.

Install suitable devices that will limit the pressure from external gas sources to the level that the vacuum system can safely withstand. In addition, install suitable pressure relief valves or rupture disks that will release pressure at a level considerably below that pressure which the system can safely withstand.

Suppliers of pressure relief valves and pressure relief disks can be located via an online search. ***Confirm that these safety devices are properly installed before installing and operating the product.***

Ensure the following precautions are complied with at all times:

(1) the proper gas cylinders are installed,

(2) the gas cylinder valve positions are correct on manual systems,

(3) and the automation is correct on automated gas delivery systems.

CAUTION

Vacuum gauges with compression fittings may be forcefully ejected if the vacuum system is pressurized.

2.6 Damage Requiring Service

Disconnect the product from all power sources and refer servicing to Qualified Service Personnel under the following conditions:

- **a.** When any cable or plug is damaged.
- **b.** If any liquid has been spilled onto, or objects have fallen into the product.
- **c.** If the product has been exposed to rain or water.
- **d.** If the product does not operate normally even if you follow the operating instructions. Adjust only those controls that are covered by the operation instructions. Improper adjustment of other controls may result in damage and will often require extensive work by a qualified technician to restore the product to its normal operation.
- **e.** If the product has been dropped or the enclosure has been damaged.
- **f.** When the product exhibits a distinct change in performance. This indicates a need for service.

Notice

Do not substitute parts or modify the instrument.

Because of the danger of introducing additional hazards, do not install substitute parts or perform any unauthorized modification to the product. Return the product to a service facility designated by MKS for service and repair to ensure that safety features are maintained. Do not use this product if it has unauthorized modifications.

Notice

Safety Check - Upon completion of any service or repairs to this product, ask the Qualified Service Person to perform safety checks to determine that the product is in safe operating order.

See Service Guidelines, Section 1.5 for detailed information regarding how to contact MKS Customer Service Representatives.

Chapter 3

Specifications

3.1 General Description

The Series 943 Digital, Cold Cathode Vacuum Sensor System provides accurate and reliable data for processes which need pressure measurement from 10^{-2} Torr up to 10^{-10} Torr. The System is easy to use and is designed for versatility, reliability, and economy.

3.2 Intended Use / Applications

The Series 943 Controller is useful either as a small system controller or as a module in more sophisticated pressure control environments. The Controller features two standard relay set points for process applications and a high voltage set point (protect set point) to protect a sensor at higher pressures.

- Measurement of high vacuum chamber pressures
- Control of high vacuum systems and process sequencing using relay set points
- Sensing abnormal pressure and taking appropriate security measures using relay set points
- Controlling system pressure using analog output as input to an automatic pressure controller
- Starting or stopping system processes with relay set points
- Measuring pressures of backfilled gases

These instruments are to be used only in accordance with the instructions in this operation manual.

3.2.1 Improper Use

- Removal of any factory installed components.
- Modifying any factory installed components.
- Removal of any labeling or warranty seals.

3.3 Storage

- Store the Mini-Ion gauge assembly indoors between -40 ^{o}C to +70 ^{o}C (-40 ^{0}F to 158 ^{0}F).
- Bag the assembly in a sealed or shrink wrapped bag with desiccant.
- All of the components should be bagged and boxed together along with the instructions for future reference.

3.4 Specifications

Table 3-1 Specifications for the Series 943 Digital, Cold Cathode Vacuum Sensor

Parameter	Specification
Performance	
Measurement Range for N_2 / Air (1) *Do NOT use this product with flammable or explosive gases.*	Torr: 1.0×10^{-2} to 1.0×10^{-10} mbar: 1.3×10^{-2} to 1.3×10^{-10} Pascal: 1.3 to 1.3×10^{-8}
Useful setpoint range	Torr: 9.0×10^{-3} to 2.0×10^{-9} mbar: 1.2×10^{-2} to 2.7×10^{-9} Pascal: 1.2 to 2.7×10^{-7}
Calibration Gas	Air/nitrogen
Physical	
Display *Resolution* *Units* *Update rate*	Red LED, 7-segment digits 14 mm in height, ±60° viewing angle 2 digits (1 leading) with 1½-digit signed exponent Torr, mbar,or Pascal 250 msec
Operating Power	100 to 120 VAC, 50/60 Hz or 230 VAC, 50/60 Hz, 9W
Output Voltage	Buffered: 0 to 9 Vdc Logarithmic: 1 to 9 Vdc (1 V / decade)
Process Controls	2 independent adjustable relay set points
Relay Contact Rating	SPDT, 1 A @ 30 VAC or 24 Vdc
Relay Response	50 msec for pressures $>10^{-8}$ Torr
Case Material	Aluminum, anodized
Materials exposed to vacuum	304 stainless steel, platinum, glass, nickel
Weight (with CF Flange)	2.3 lb (1.04 kg)
Insulation Coordination	Installation (Overvoltage) Category II, Pollution Degree 2
Dimensions	(W x D x H) 3¾" x 7" x 3¾" (96 mm x 178 mm x 96 mm)
Size	1/4 DIN
Typical Weight (with KF Flange)	2.2 lb (1 kg)
Altitude	2000 m (6561 ft) maximum
Operating Temperature	5 ° to 40 °C (41 ° to 104 °F)
Operation Humidity	80% maximum for temperatures less than 31°C, decreasing linearly to 50% maximum at 40°C
CE Certification	EMC Directive Low Voltage Directive
Sensors	
Cold Cathode Sensor Type	Series 421 or Series 423 I-MAG® isolated collector, inverted magnetron
Response Time	40 msec
Reproducibility	5% of indicated pressure at constant temperature
Calibration Gas	Air/nitrogen
Installation Orientation	Any (*port down suggested*)
Materials Exposed to Vacuum	Series 421 - Stainless steel, Al 6061, silver-copper brazing alloy, alumina ceramic, Elgiloy®, OFHC® copper Series 423 - SS 302, SS 304, glass, Al, Inconel® X-750, alumina ceramic
Internal Volume	Series 421 - 1.8 in.^{3} (30 cm^3) Series 423 - 0.9 in.^{3} (15 cm^3)

Table 3-1 Specifications for the Series 943 Digital, Cold Cathode Vacuum Sensor

Parameter	Specification
Operating Temperature Range	0° to 70°C (32° to 158°F)
Maximum Bakeout Temperature *Without Controller or Cables*	Series 421 - 250°C (482°F) when backshell subassembly removed, 125°C (257°F) Series 423 - 500°C (932°F) for CF flange model, magnet removed
Diameter	Series 421 - 2.2 in. (56 mm) Series 423 - 2.6 in. (66 mm)
Length	Series 421 - 6.3 in. (160 mm) Series 423 - 3.4 in. (86 mm)
Typical Weight *(with 2¾" CF Flange)*	421 - 2.4 lb (1.1 kg) 423 - 1.8 lb (0.8 kg)
Vacuum Connection	KF 25, KF 40, 2¾" CF (423 - rotatable), 8 VCR®-F (½"), 1" tubing
Specifications and dimensions are subject to change without notice.	

1. Measurements will change with different gases and mixtures. Correction parameters must be used for gases other than N_2 or Air.

2. Do NOT use these products with flammable or explosive gases.

Notes:

Chapter 4

Installation

4.1 Mounting the Controller

The Series 943 Controller is designed for either panel mounting or stand-alone use.

An optional hardware kit is available for mounting the Controller into a standard ¼ DIN cutout in a panel up to 3/16-inch thick (see Section 6.7, Accessories). A dimensioned illustration below shows the required cutout. Leave at least 3 inches of clearance behind the Controller to accommodate the connectors and cables.

To mount the Controller into the panel,

1. Slip it through the cutout in the front.

2. Slide the panel mounting brackets into the slots on both sides of the Controller from the rear.

3. Secure them with the thumbscrews provided.

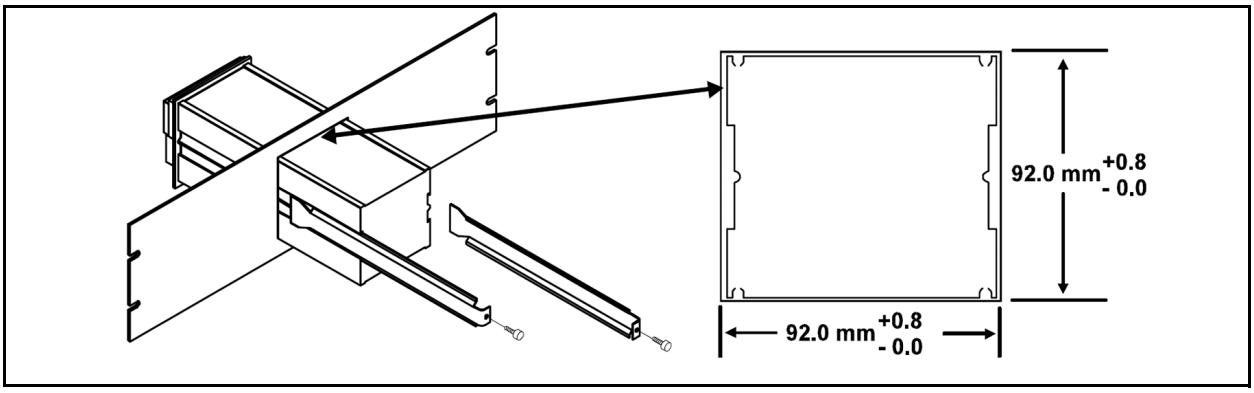

Figure 4-1: 1/4 DIN Panel Mount

Adhesive backed rubber feet for benchtop use are also included in the mounting kit.

1. Remove the adhesive backing from each foot.

2. Apply one to each corner of the aluminum bottom surface.

4.1.1 AC Power Cord

The Series 943 Controller may be ordered with a North American, standard 120 VAC, 50/60 Hz power cord with a female IEC 320 connector.

If the Controller is ordered without a power cord, use only a harmonized, detachable cord set with conductors having a cross-sectional area equal to or greater than 0.75 mm2. The power cord should be approved by a qualified agency such as VDE, Semko, or SEV.

4.1.2 Ground the Controller and Vacuum System.

The Controller is grounded through the ground conductor of the power cord. If the protective ground connection is lost, all accessible conductive parts may pose a risk of electrical shock. Plug the cord into a properly grounded outlet only.

CAUTION

Do not exceed the rated line voltage of your unit. Electrical shock may result.

4.1.3 Fuse Replacement

The Series 943 Controller has a combined fuse holder and power inlet on the rear panel. Replace the fuse following the steps below.

1. Unplug the power cord from the power source and the Controller.

2. Snap out the fuse holder drawer.

3. Replace the fuse(s) with one of the following time-lag fuses:

- T 0.16 A (Ø 5 mm x 20 mm) - 100 to 120 VAC
- T 0.063 A (Ø 5 mm x 20 mm) - 220 to 240 VAC.

4. Close and secure the fuse holder drawer.

4.1.4 Accessory Connector

Relay set point contacts, analog output voltage, and high voltage remote disabling can be accessed from the Accessory port on the rear panel of the Controller. A connector kit to mate to the port is provided. The figure and chart below identify the pin functions of the Accessory connector.

Table 4-1: 15-Pin D-sub Accessory Connector

Pin #	Function
1	Set point relay 1 - normally closed contact
2	Set point relay 1 - common
3	Set point relay 1 - normally open contact
4	Set point relay 2 - normally closed contact
5	Set point relay 2 - common
6	Set point relay 2 - normally open contact
7	not used
8	not used
9	High voltage - disable
10	Ground - high voltage disable
11	Analog output voltage - logarithmic (+)
12	Analog output voltage - logarithmic (-_
13	Analog output voltage - buffered (+)
14	Analog output voltage - buffered (-)
15	not used

Notice

Do not inadvertently short circuit the set point relay terminals to the analog output voltage.

If both the analog output and the high voltage enable are being used, use separate ground wires for each and connect them only at the Accessory port. Otherwise, the analog voltage may be incorrect.

4.1.5 Logarithmic Analog Output

Connecting to pins 11 and 12 provides a logarithmically-scaled, pressure dependent voltage V_0 from 1 to 9 V. Pressure P can be calculated using the following equation:

$P = 10(V_0-11)$

where,

V_0 is in volts

P is in Torr.

For example, if $V_0 = 5$ V, then $P = 10^{(5-11)} = 10^{-6}$ Torr

This output is provided by a microcontroller driving a D/A converter and has a response time of about 0.25 sec.

Table 4-2: Logarithmic Analog Output

If V_0 =	Then
0V	Controller is OFF
0.5V	Display reads LO x 10^{-10} Torr
9V	Display reads HI x 10^{-2} Torr
9.5V	High voltage turned OFF by protection set point
10V	High voltage is OFF

4.1.6 Buffered Analog Output

A pressure dependent voltage V_0 with a range of 0 to 9 V is provided on pins 13 and 14. Pressure can be determined using the graph shown in Figure 4-2 or Figure 4-3.

This output is simply a buffered output of the sensor circuit and has a fast response time of less than 50 msec above 1.0 x 10^{-8} Torr.

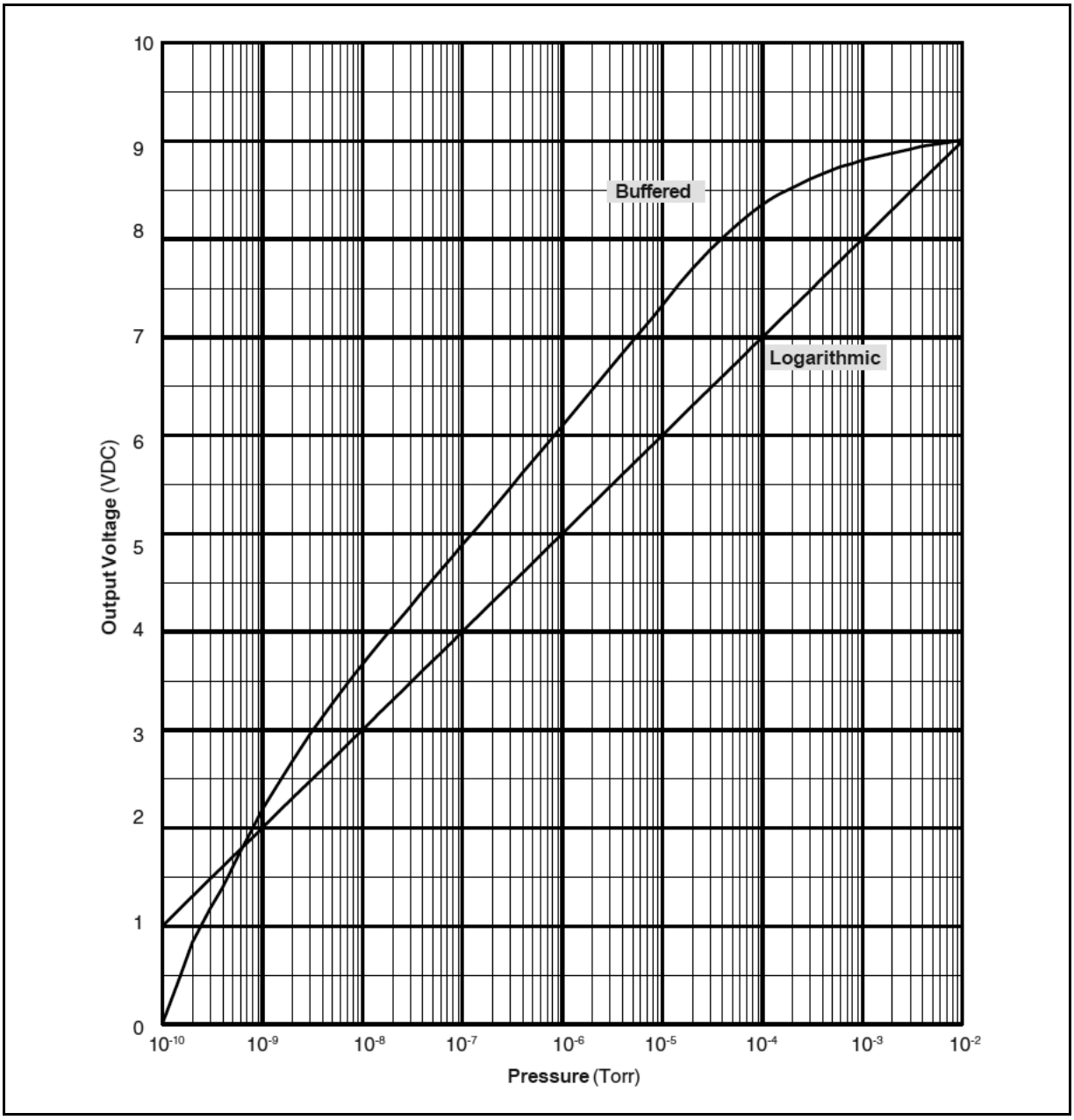

Figure 4-2: Cold Cathode Analog Output Voltage vs. Pressure

Series 943 Cold Cathode System
Analog Output Voltage vs. Pressure

Output Buffered / Logarithmic (V)		Pressure (Torr)	Output Buffered / Logarithmic (V)		Pressure (Torr)
0.00	1.00	1.0E-10	6.10	5.00	1.0E-06
0.48	1.18	1.5E-10	6.31	5.18	1.5E-06
0.83	1.30	2.0E-10	6.47	5.30	2.0E-06
1.17	1.48	3.0E-10	6.69	5.48	3.0E-06
1.39	1.60	4.0E-10	6.83	5.60	4.0E-06
1.76	1.78	6.0E-10	7.05	5.78	6.0E-06
1.99	1.90	8.0E-10	7.20	5.90	8.0E-06
2.19	2.00	1.0E-09	7.32	6.00	1.0E-05
2.48	2.18	1.5E-09	7.55	6.18	1.5E-05
2.68	2.30	2.0E-09	7.69	6.30	2.0E-05
2.95	2.48	3.0E-09	7.89	6.48	3.0E-05
3.13	2.60	4.0E-09	8.01	6.60	4.0E-05
3.38	2.78	6.0E-09	8.17	6.78	6.0E-05
3.54	2.90	8.0E-09	8.27	6.90	8.0E-05
3.67	3.00	1.0E-08	8.35	7.00	1.0E-04
3.89	3.18	1.5E-08	8.46	7.18	1.5E-04
4.04	3.30	2.0E-08	8.52	7.30	2.0E-04
4.25	3.48	3.0E-08	8.61	7.48	3.0E-04
4.41	3.60	4.0E-08	8.66	7.60	4.0E-04
4.62	3.78	6.0E-08	8.73	7.78	6.0E-04
4.77	3.90	8.0E-08	8.77	7.90	8.0E-04
4.88	4.00	1.0E-07	8.80	8.00	1.0E-03
5.09	4.18	1.5E-07	8.85	8.18	1.5E-03
5.25	4.30	2.0E-07	8.88	8.30	2.0E-03
5.46	4.48	3.0E-07	8.92	8.48	3.0E-03
5.62	4.60	4.0E-07	8.94	8.60	4.0E-03
5.83	4.78	6.0E-07	8.97	8.78	6.0E-03
5.98	4.90	8.0E-07	8.99	8.90	8.0E-03
			9.01	9.00	1.0E-02

Figure 4-3: Cold Cathode Analog Output Voltage vs. Pressure

4.1.7 Remote High Voltage Enable/Disable

The cold cathode sensor's high voltage may be turned OFF or ON using a set point from a low vacuum sensor, such as a Pirani or convection Pirani. Use pins 9 and 10 to connect the Controller to the sensor for this external control.

To use this input, toggle the high voltage switch to Remote. If the high voltage is disabled by the protect set point, the Remote connection must be set to first disable and then enable the high voltage to turn it back ON.

Table 4-3: Remote High Voltage Enable/Disable

If Pin 9 is:	High voltage is:
Disconnected or Connected to a "logic Hi" of +5V	ON (sensor enabled)
Connected to pin 10 through a switch or relay contact or connected to a "logic Low" of 0V	OFF (sensor disabled)

4.1.8 Relay Inductive Loads and Arc Suppression

If the set point relays are used to switch inductive loads, e.g., solenoids, relays, transformers, etc., the arcing of the relay contacts may interfere with Controller operation or reduce relay contact life. Therefore an arc suppression network (see Figure 4-4) is recommended. The values of the capacitance *C* and the resistance *R* are calculated by the equations:

$$C = \frac{I^2}{10} \text{ and } R = \frac{E}{10 \cdot /a}$$

where,

$a = 1 + (^{50}/E)$

C is in microfarads

R is in ohms

I is DC or AC_{peak} load current in amperes

E is DC or AC_{peak} source voltage in volts

Note that C_{min} = 0.001 mF and R_{min} = 0.5 W.

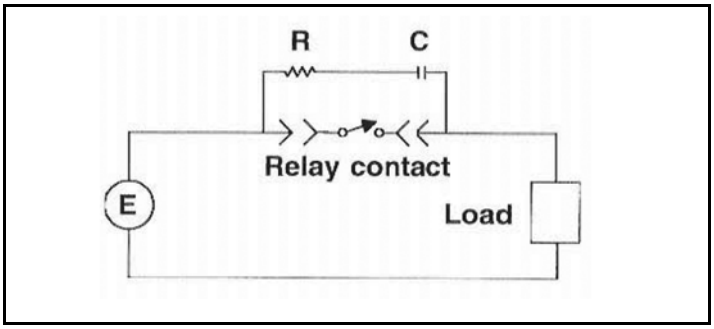

Figure 4-4: Relay Arc Suppression Network

4.2 Installing a Series 943 System Sensor

The Series 943 Controller must be turned OFF before connecting or disconnecting a sensor cable from the sensor or Controller.

4.2.1 Locating a Cold Cathode Sensor

Locate a cold cathode sensor where it can measure process chamber or manifold pressure. Install it away from pumps, vibration sources, and gas sources to give the most representative values.

Notice

Install the gauge on the vacuum chamber where it is protected from physical damage and high heat.

See Section 2.5, Over Pressure Conditions, for important safety information before mounting the gauge.

Locate and orient a cold cathode sensor where contamination is least likely. If it is installed directly above a diffusion pump, for example, oil vapor could contaminate the cathode, anode, or other vacuum exposed parts, causing the calibration to shift.

If a low vacuum sensor, such as a Pirani sensor, is used to disable the cold cathode sensor remotely, locate it closely to the cold cathode sensor.

4.2.2 Orienting a Cold Cathode Sensor

A cold cathode sensor can be installed in any operating position without affecting accuracy. Installing it with the vacuum port facing down is best as this helps prevent contaminants falling into it.

4.2.3 Managing Contamination in a Cold Cathode Sensor

If pressure readings appear to be erratic, the Sensor may be contaminated. Inspect it visually. If contamination is visible (e.g., discoloration of the aluminum cathode), replace the internal components with an Internal Rebuild Kit (see Section 6.7, Accessories).

Depending on the degree of contamination and application of the Sensor, the internal parts may be cleaned - either ultrasonically, with mild abrasives, or chemically.

Operation at pressures above 10^{-3} Torr for extended periods can increase the likelihood of contamination.

4.2.4 Testing a Cold Cathode Sensor

HPSTM cold cathode sensors contain the anode and cathode (collector) electrodes. Test the sensor with an ohmmeter. There should be no shorts between the electrodes or from the electrodes to the tube body.

4.2.5 Connecting a Cold Cathode Sensor

Mount the sensor to a grounded vacuum system. Use a conductive, all-metal clamp to mount a KF 25 or KF 40 flanged sensor body.

If the Series 423 Sensor has a CF flange, remove the magnet first to allow clearance for bolt installation.

Notice

The Series 423 Sensor has a strong magnetic field. Be careful when using it around tools and other equipment.

When replacing the magnet, note that it is keyed to the sensor body to protect the feedthrough pins from damage. The pins should be straight and centered.

A cold cathode sensor and the Series 943 Controller are connected to one another with coaxial cables with SHV and SMA connectors. Connect the cable to the sensor and to the Series 943 Controller before turning ON the system. Tighten the thumb screw on top of the cable to make sure it is securely in place for strain relief.

CAUTION

Do not connect or disconnect any electrical connectors while power is applied to the equipment (hot swapping). Doing so may cause damage to the equipment or severe electrical shock to personnel. This hazard is not unique to this product.

Connect the SHV and SMA connectors to their respective connectors on the rear panel of the Controller - H.V. (SHV connector) and Ion Current (SMA connector).

Where stress might be applied to the cable, use separate strain relief to avoid damage to the sensor, cable, or the Controller. Cables are available from the factory in standard lengths of 10, 25, 50, and 100 feet and in custom lengths up to 300 ft.

Some applications may require the use of special cables, such as where the connection must be routed through restrictive barriers or through a conduit. Custom cables may be fabricated for these situations. Use SHV and SMA connectors for all applications.

Chapter 5

Operation

5.1 Theory of a Cold Cathode Ionization Sensor

In a cold cathode sensor, gas molecules are ionized by a high voltage discharge of electrons. Sensitivity is enhanced by a magnetic field.

MKS cold cathode sensors are not standard Penning sensors. The inverted magnetron design includes an isolated collector, making the sensor less susceptible to contamination and allowing a wider range of pressure measurement. The MKS IgniTorr™, an optional cold cathode starting device initiates the ionization process in cold cathode sensors, starting UHV pressure readings in seconds. (see Section 6.7 Accessories.

A cold cathode ionization sensor has a number of inherent advantages over a hot cathode sensor. These include:

- No filament to break or burn out, which makes it immune to inrushes of air, and it is relatively insensitive to vibration damage
- No x-ray limit for lower pressure measurement
- No adjustment for emission current or filament voltage is needed
- Degassing is not needed
- Properly designed sensor tubes can be cleaned and reused almost indefinitely

With only one current loop, the control circuit is simple and quite reliable, as opposed to a hot cathode sensor, which has three.

The cold cathode sensor consists of a cathode and anode with a potential difference of several kilovolts. The electrodes are surrounded by a magnet, arranged so that the magnetic field is essentially perpendicular to the electric field. The crossed electric and magnetic fields cause the electrons to follow long spiral trajectories increasing the chance of collisions with gas molecules, thereby providing a significant increase in ionization efficiency relative to a hot cathode sensor.

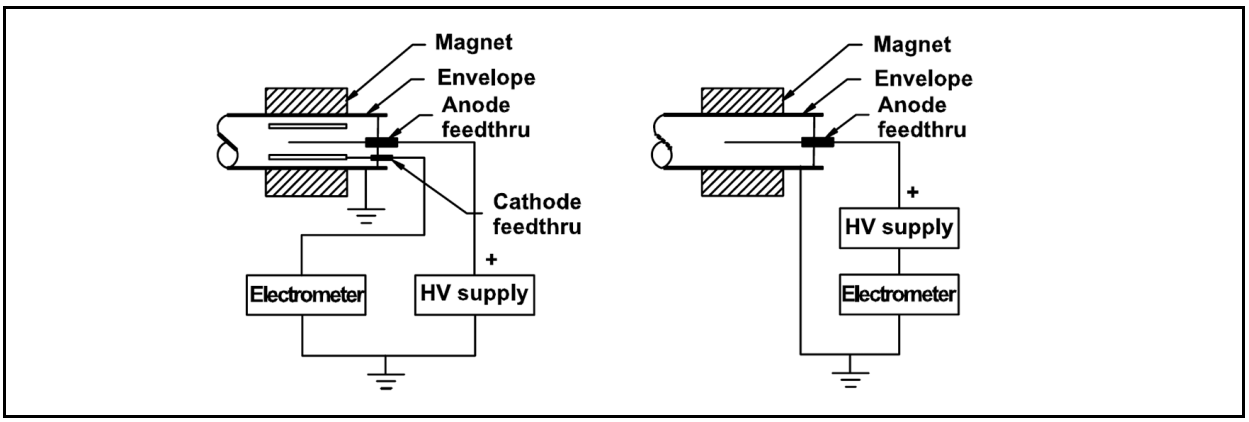

Figure 5-1: Inverted Magnetron, Cold Cathode Sensor Design

In operation, a near constant circulating electron current is trapped by the crossed fields. Collisions of electrons with residual gas molecules produce ions which are collected by the cathode. The sensor current i as a function of pressure P obeys the relationship:

$i = kP^{n}$
where,
i is in amperes
k is a constant P is in Torr
n is a constant, usually in the range of 1.00 to 1.15

This equation is valid for the pressure range from 10^{-3} Torr down to 10^{-8} Torr depending upon the series resistor used. At pressures around 10^{-6} Torr, sensitivities of 1 to 10 A/Torr are not unusual.

Starting a cold cathode sensor depends upon some chance event such as field emission or a cosmic ray producing the first electron. This produces additional electron/ion pairs during its transit between the electrodes, and the discharge soon builds up to a stable value. Start of the discharge normally requires a very short time at 10^{-6} Torr or above, a few minutes at 10^{-8} Torr, and longer times at lower pressures.

At high pressures, the current increases, and sputtering of the cathode can become a problem. A large series resistor reduces sputtering, and the voltage across the tube is pressure dependent between 10^{-4} and 10^{-2} Torr. This extends the measuring range of the cold cathode to 10^{-2} Torr.

MKS cold cathode sensors use an inverted magnetron with separate feedthroughs for the anode high voltage and the cathode current. This geometry uses a cylindrical cathode, a central wire anode, and external cylindrical magnet which provides an axial field. The cathode is insulated from the grounded metal housing.

The inverted magnetron geometry has a characteristic electrical *conductance vs. pressure* curve which is more reproducible than other arrangements, and also works well to low pressures without risk of the discharge going out.

5.2 943 Controller Front / Rear Panels

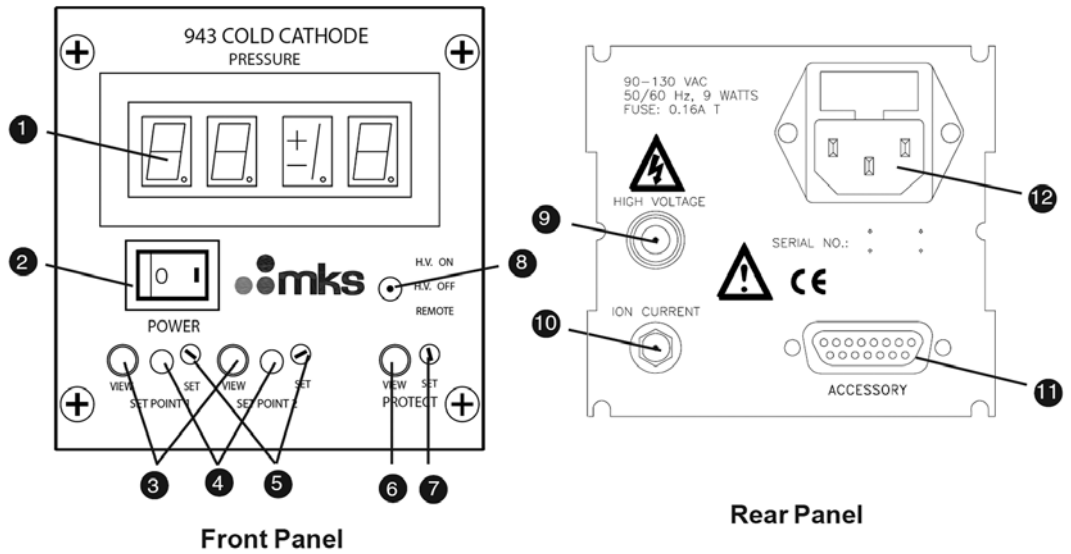

1. Digital LED Display
2. Power On-Off Rocker Switch
3. View Set Point Push-buttons
4. LED Set Point Indicators
5. Set Point Adjustment Potentiometers
6. View Protect Set Point Push-button
7. Protect Set Point Adjustment Potentiometer
8. High Voltage Toggle Switch (*H.V. On / H.V. Off / Remote*)
9. High Voltage SHV Connector
10. Ion Current SMA Connector
11. Male, 15-pin "D" *Accessory* Connector
12. AC Power Inlet, IEC 320 w/ Fuse Holder

Figure 5-2: 943 Controller Front and Rear Panels

5.3 Series 943 Circuit Description

The Series 943 Controller is an analog instrument which has four basic circuits to control the cold cathode sensor and uses signals from the sensor to display pressure, operate the set point relays, and supply analog voltage-vs.-pressure outputs. See Figure 5-1.

5.3.1 High Voltage Power Supply

The high voltage power supply is a DC to DC voltage converter. This circuit requires very few components, which ensures high reliability, and is closed loop controlled to a reference voltage to provide a very stable high voltage output. The high voltage output is connected to the sensor through a series resistor which limits the current through the sensor at high pressures to about 100 µA, thereby reducing internal sputtering of the discharge cell.

5.3.2 Electrometer

The electrometer performs a logarithmic conversion to measure the sensor tube's current and high voltage. This electrometer has a dynamic range wide enough to cover the entire pressure range with no electronic range changing.

5.3.3 Analog Processing

The processing circuitry combines the electrometer signals and scales the result to produce a pressure dependent voltage signal. This voltage drives the A/D converter, unprocessed analog output, and the set point relay circuitry.

5.3.4 Set Point Comparators

This part of the circuit compares the output of the signal processing circuitry to the value of the set point adjusting potentiometers and turns the process control relays on and off accordingly.

5.3.5 Microprocessor

This part of the circuit reads the output of the A/D converter, displays pressure on the LED display, and produces a pressure dependent voltage signal using a D/A converter. See Figure 5-3.

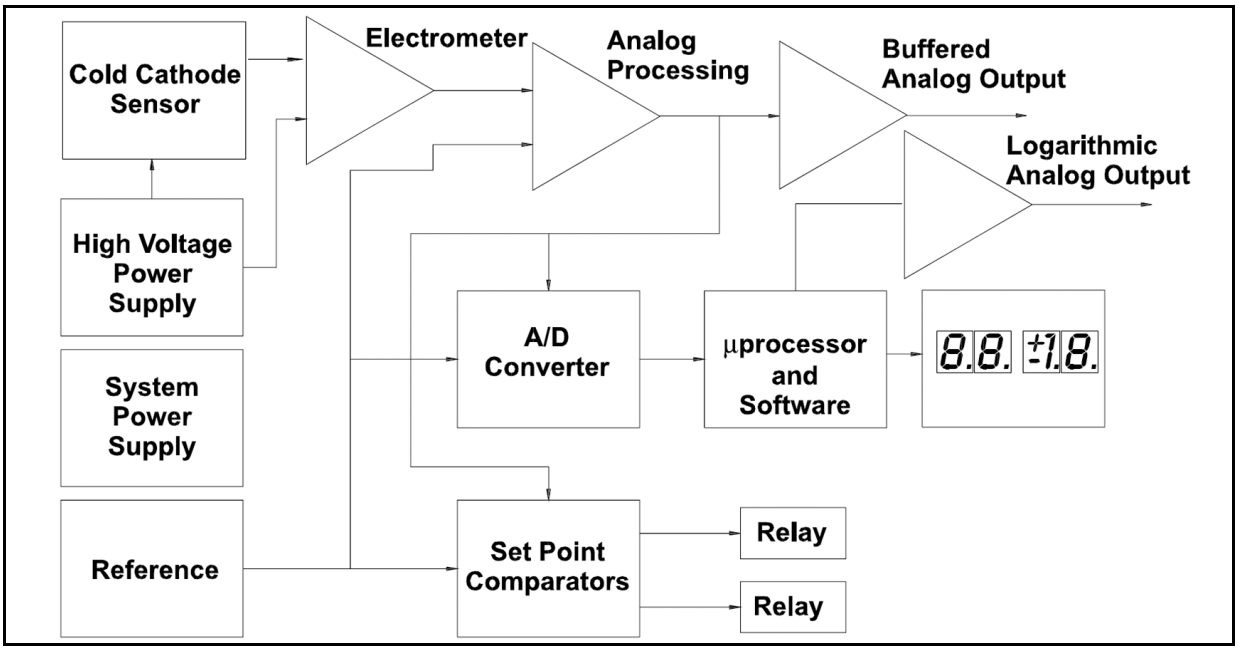

Figure 5-3: 943 Controller Block Diagram

5.4 Using the Series 943 System with Gases other than Air or N_2

Before using the Series 943 Controller to measure pressure of gases other than air or nitrogen, read and understand this section. If additional information is needed, contact MKS Customer Support at: phone +1-833-986-1686 or email insidesales@mksinst.com.

In a cold cathode ionization sensor, the degree of ionization, hence the indicated pressure, is gas-type dependent (see Section 5.1).

The 943 System provides analog voltage output for air or nitrogen according to Figure 5-4 and Figure 5-5. If used with another gas, the Controller displays nitrogen equivalent pressure, a pressure corresponding to ionization for nitrogen, which may be higher or lower than its true pressure.

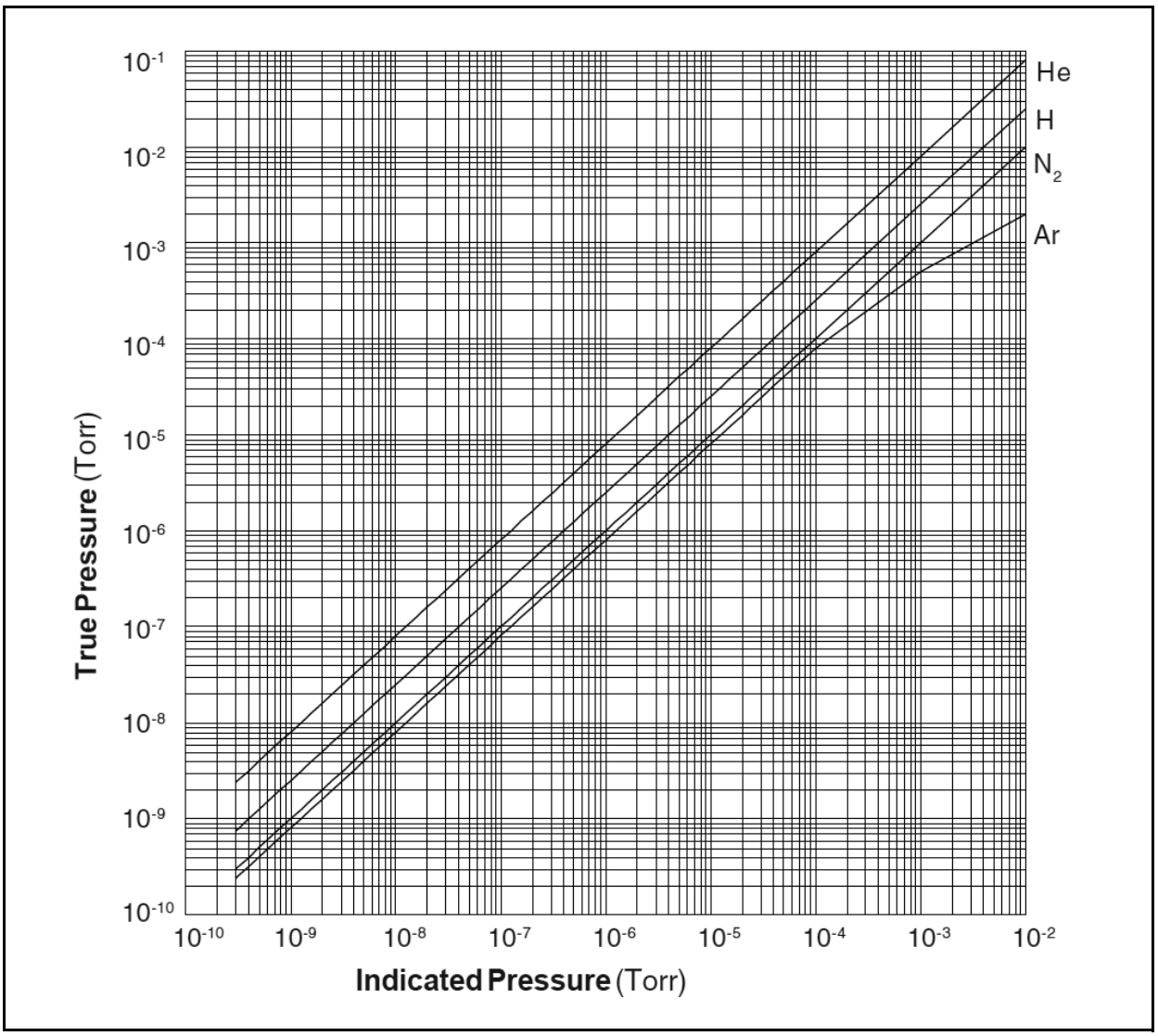

Figure 5-4: True Pressure vs. Indicated Pressure

Figure 5-5 shows the correction factors needed to obtain curves for selected gases other than air/nitrogen. You can make your own graph from this information.

Table of Correction Factors

$P_{H_2} = P_{Indicated} \times 2.5$

$P_{He} = P_{Indicated} \times 8$

$P_{Ar} = P_{Indicated} \times 0.8$ below 10^{-4}

$P_{Ar} = P_{Indicated} \times 0.5$ at 10^{-3}

$P_{Ar} = P_{Indicated} \times 0.2$ at 10^{-2}

Figure 5-5: True Pressure vs. Indicated Pressure Correction Factors

5.4.1 Calibrating for Other Gases

Air calibration is indistinguishable from nitrogen. To determine the voltage/pressure relationship for a gas which is not shown on the graph, calibrate the Series 943 System which requires a gas independent sensor, such as a capacitance manometer, or a spinning rotor gauge to act as the calibration standard. A curve can then be generated.

The Series 943 Controller cannot be calibrated for direct pressure readings of gases other than air or nitrogen. The calibration is intended only to match the air/nitrogen curve of the sensor.

Gas-type dependence can either be an advantage or a disadvantage. On the one hand, it's possible to use a cold cathode sensor as a leak detector. On the other hand, the pressure indication of a gas may vary by a factor of five or more.

Calibration factors, or relative sensitivity factors, for cold cathode ionization sensors are not the same as those for hot cathode sensors.

5.5 Reading Pressure

Notice

A sensor must be connected to the Controller before turning it ON.

1. Set the Controller's high voltage switch to H.V. OFF.

2. Turn ON the power switch.

OFF will appear on the display. If the high voltage switch was left in the H.V. ON or H.V. Remote position before power ON, PRO (Protect) will appear.

Once the system pressure is less than or equal to 10^{-2} Torr, the Series 943 Controller is ready to measure pressure.

3. Set the high voltage switch to H.V. ON.

After the discharge starts (start times vary), a pressure reading will appear on the front panel.

Figure 4-2 and Figure 5-3 represent the system's voltage output as a function of pressure for nitrogen.

A phenomenon known as "roll-back" may occur if a cold cathode sensor is used for pressure readings above 10^{-2} Torr. As pressure increases, the discharge in the sensor goes out. The pressure reading decreases or "rolls back", even though the pressure continues to increase. At some point, LO appears on the Controller display.

Operating the sensor at pressures above 10^{-2} Torr will not only give an incorrect reading but may also damage the sensor (see Section 5.6.2).

5.6 Set Points

5.6.1 Adjusting the Set Points

To adjust a set point to open or close its relay contact at a particular pressure:

1. Depress and hold the View Set Point push-button on the front panel for Set Point 1 or 2.

2. Use a small screwdriver to adjust the corresponding potentiometer until the reading coincides with the desired set point pressure.

When an LED is ON, the indicated pressure is below the set point value, the normally open relay contact is closed, and the normally closed contact is open. When an LED is OFF, the indicated pressure is above the set point value, the normally open relay contact is open, and the normally closed contact is closed.

5.6.2 Protect Set Point

A protect set point turns OFF a sensor to prevent damage caused by sputtering at high pressures. To adjust the protect set point to turn OFF the sensor at a particular pressure:

1. Depress and hold the View Protect push-button on the front panel.

2. Use a small screwdriver to adjust its potentiometer until the reading coincides with the desired set point pressure.

If the protect set point turns the high voltage OFF, PRO will appear on the display. Turn OFF the high voltage switch and then back ON again to enable the high voltage.

The protect set point cannot work if the system's pressure is in the sensor's "roll-back" pressure region (see Figure 5-4).

Chapter 6

Service & Maintenance

6.1 Introduction

The procedures in this section provide instructions for normal service issues that may be required during use of the Series 943 Cold Cathode Vacuum Sensor System.

6.2 Service Guidelines

Some minor difficulties are readily corrected in the field.

Because the product contains static-sensitive electronic parts, the following precautions must be followed when troubleshooting:

- Use a grounded, conductive work surface. Wear a high impedance ground strap for personnel protection.
- Use conductive or static dissipative envelopes to store or ship static sensitive devices or printed circuit boards.
- Do not operate the product with static sensitive devices or other components removed from the product.
- Do not handle static sensitive devices more than absolutely necessary, and only when wearing a ground strap.
- Do not use an ohmmeter for troubleshooting MOS circuits. Rely on voltage measurements.
- Use a grounded, electrostatic discharge safe soldering iron.

NOTE: This product is designed and tested to offer reasonably safe service provided it is installed, operated, and serviced in strict accordance with these safety instructions.

WARNING

High Voltage

High voltages present within the electronics enclosure are capable of causing injury or death. To avoid electric shock, wait 3 minutes after power is removed before touching any component within the electronics enclosure.

The service and repair information in this manual is for the use of Qualified Service Personnel. To avoid shock, do not perform any procedures in this manual or perform any servicing on this product unless you are qualified to do so.

CAUTION

Product Modifications

Do not substitute parts or modify the instrument.

Because of the danger of introducing additional hazards, do not install substitute parts or perform any unauthorized modification to the product. Return the product to a service facility designated by MKS for service and repair to ensure that safety features are maintained. Do not use this product if it has unauthorized modifications.

6.3 Damage Requiring Service

Disconnect this product from all power sources, and refer servicing to Qualified Service Personnel if any the following conditions exist:

- The gauge cable, power-supply cord, or plug is damaged.
- Liquid has been spilled onto, or objects have fallen into, the product.
- The product has been exposed to rain or water.
- The product does not operate normally even if you have followed the Operation Instructions. Adjust only those controls that are covered in the instruction manual. Improper adjustment of other controls may result in damage and require extensive work by a qualified technician to restore the product to its normal operation.
- The product has been dropped or the enclosure has been damaged.
- The product exhibits a distinct change in performance. This may indicate a need for service.

CAUTION

Replacement Parts

When replacement parts are required, be certain to use the replacement parts that are specified by MKS, or that have the same characteristics as the original parts. Unauthorized substitutions may result in fire, electric shock or other hazards.

CAUTION

Safety Check

Upon completion of any service or repairs to this product, ask the Qualified Service Person to perform safety checks to determine that the product is in safe operating order.

6.4 Troubleshooting

Table 6-1 General Symptoms/Possible Causes

Symptom	Possible Causes	Remedy
Pressure reading is inaccurate or erratic	1. Pressure may be above the 2. System's range. 3. External magnetic field may be interfering with sensor operation. 4. Sensor may need cleaning. 5. Controller may be out of calibration. 6. Gas in system may not be air or nitrogen	1. Turn OFF Controller. Do not operate above 10^{-2} Torr. 2. Move magnetic field source away from sensor or vice versa. 3. Rebuild sensor internals (see Section 6.7, Accessories). 4. Return to MKS for repair. 5. Use a correct conversion factor.
No pressure reading on display	1. Controller might not be plugged into proper power source. 2. Power switch may be OFF. 3. Power fuse(s) may be blown. 4. Power supply may be defective	1. Plug into functional AC outlet with the correct voltage. 2. Turn power ON. 3. Replace fuse. 4. Return to MKS for repair.
LO is displayed	1. Ion current or high voltage cable may be disconnected or may have a bad or broken connection. 2. Sensor discharge may not have yet started. 3. Pressure may be below 4. System's range. 5. Pressure may be above System's range.	1. Check cable connections. Replace cable if necessary. 2. Temporarily backfill to a higher pressure (10^{-4} Torr). 3. The Series 943 Controller is operating normally. 4. Turn high voltage OFF and set pressure below 10^{-2} Torr.
PRO is displayed	5. Pressure is above the protect set point.	1. Change protect set point or reduce system pressure.
Set point relay will not operate	1. Set point voltage may be incorrectly set. 2. Short in or incorrectly wired Accessory connector. 3. Defective PC board.	1. Check set point. 2. Rewire connector. 3. Return to MKS for repair.

WARNING

High Voltage

To prevent electrical shock, turn OFF electrical power before servicing the Module. Do not touch any gauge pins while the sensor tube is under vacuum.

6.5 Contaminated 943 Sensor

If pressure readings appear to be erratic, the Sensor tube may be contaminated. Inspect it visually. If contamination is visible, you should replace the internal components with an Internal Rebuild Kit (see Section 6.7, Accessories).

Depending on the degree of contamination and application of the sensor, the internal parts may be cleaned - either ultrasonically, with mild abrasives, or chemically.

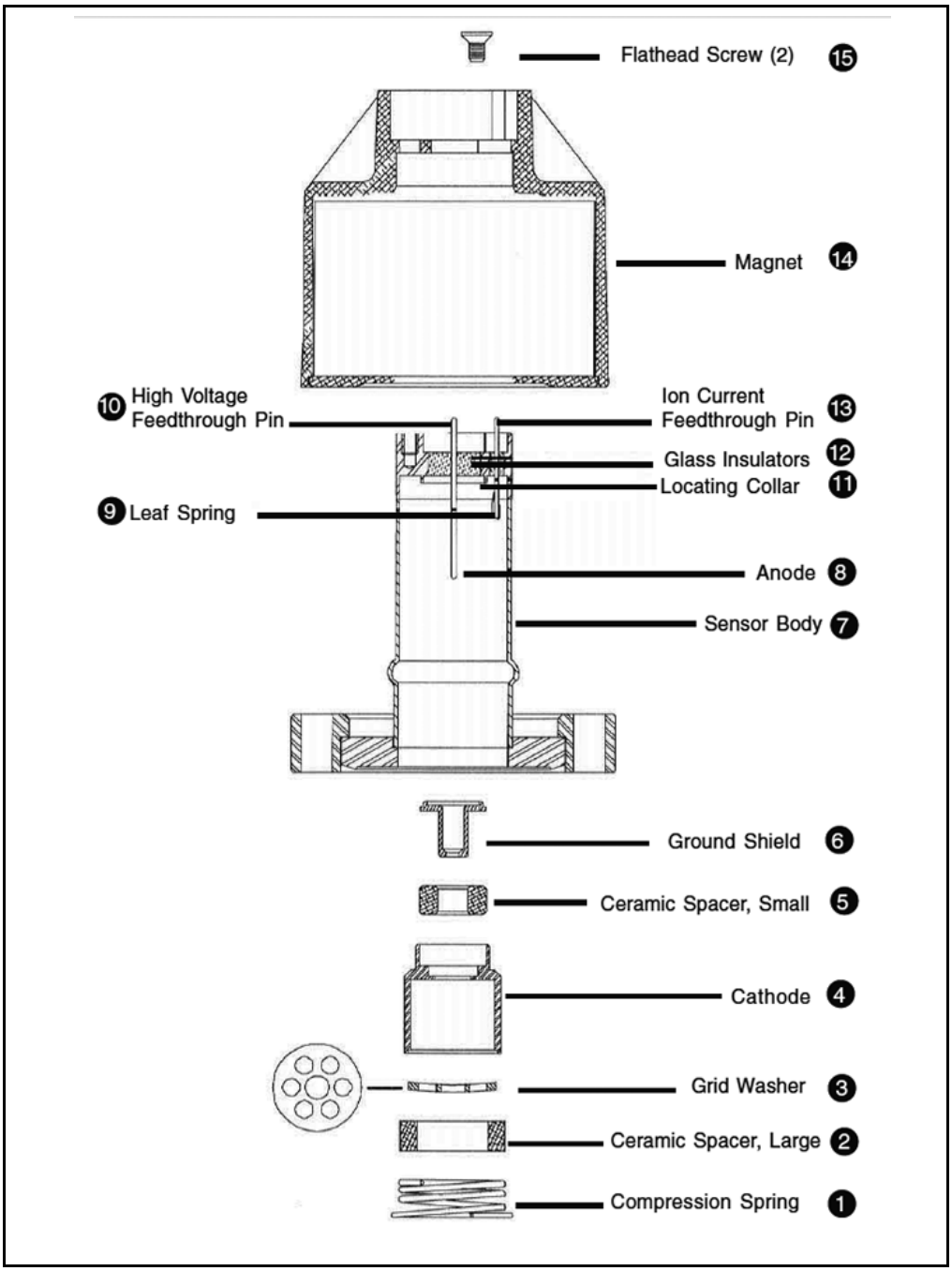

Figure 6-1: 943 Cold Cathode Sensor Assembly Illustration

6.5.1 Disassembly

Tools required: clean tweezers and smooth-jaw, needle-nose pliers. Wear cleanroom gloves during all handling and cleaning procedure.

See Section 6-1 for disassembly and cleaning, and Section 6-2 for final reassembly.

CAUTION

Delicate Internal Components

Do not bend the anode (8) or the leaf spring (9) on the ion current feed through pin (13) when disassembling or assembling the Sensor; they are very fragile and could break.

3. Loosen the thumb screw on top of the sensor cable and then remove it. Loosen the two flat head screws (15). Remove the magnet (14).

4. Using the smooth-jaw, needle-nose pliers, firmly grab the compression spring (1) at the tip closest to the flange.

5. Pull on the compression spring while rotating it to free it from the formed groove of the sensor body (7). Continue to pull until the compression spring is completely free.

6. Carefully remove the remaining components from the sensor body.

6.5.2 Cleaning the Components

CAUTION

Delicate Internal Components

Do not use chemicals to clean the anode (8); mild abrasives or ultrasonic cleaning are acceptable.

1. If ultrasonic cleaning, use high quality detergents compatible with aluminum, such as ALCONOX®.

2. Scrubbing with mild abrasives can remove most contamination.

3. Scotch-Brite™ or a fine emery cloth may be effective. Rinse with alcohol.

4. Clean aluminum and ceramic parts chemically in a wash, such as a 5 to

5. 20% sodium hydroxide solution (not for semiconductor processing), at room temperature (20 °C) for one minute. Follow with a preliminary rinse of deionized water. Remove the black residue left on aluminum parts due to this process in a 50% to 70% nitric acid dip for about 5 minutes.

6. Each of the above cleaning methods should be followed with multiple rinses of deionized water. Dry all internal components and the sensor body (7) in a clean oven. The two ceramic spacers, (2) and (5), are slightly porous and will require longer drying time in the oven to drive off the absorbed water.

6.5.3 Reassemble the Sensor

1. Check the anode (8). It should be straight and centered with the sensor body (7) for proper operation.

2. Roll the sensor body on a flat surface and look for any radial run out motion.

3. Install the ground shield 6 using tweezers. Make sure that at the groove of its larger diameter, the ground shield interlocks with the locating collar 11.

4. Slide the small ceramic spacer 5 over the small end of the ground shield 6. Check that the leaf spring 9 will contact the base of the cathode 4 as shown to the right. If not, remove the small ceramic spacer and the ground shield. Gently bend the leaf spring towards the anode and ceramic spacer.

5. Slide the cathode 4, the grid washer 3, and the large ceramic spacer 2 into place. The grid washer has a concave shape. Refer to the figure to see its installation orientation.

6. Insert the small end of the compression spring 1 into the sensor body 7. Using your thumbs, push the larger end of the spring into the sensor body until it is contained within the tube's inside diameter. Using the smooth-jaw, needle-nose pliers, work the compression spring down into the sensor body until it is fully seated in the formed groove.

7. Inspect the ground shield 6 and the grid washer 3 to verify they are centered with respect to the anode 8. If adjustment is needed, gently reposition the grid washer/cathode assembly, taking care not to scratch the grid washer.

8. Measure the resistance between the ion current feed through pin 13 and the grid washer 3 to verify that the leaf spring 9 is in contact with the cathode 4. The measurement should indicate a short circuit between them. There should be an open circuit between the ion current feed through pin 13 and both the high voltage feed through pin 10 and sensor body 7.

9. The Sensor is ready for installation. If it is not immediately installed, cover the flange with a clean vacuum grade cap / flange protector.

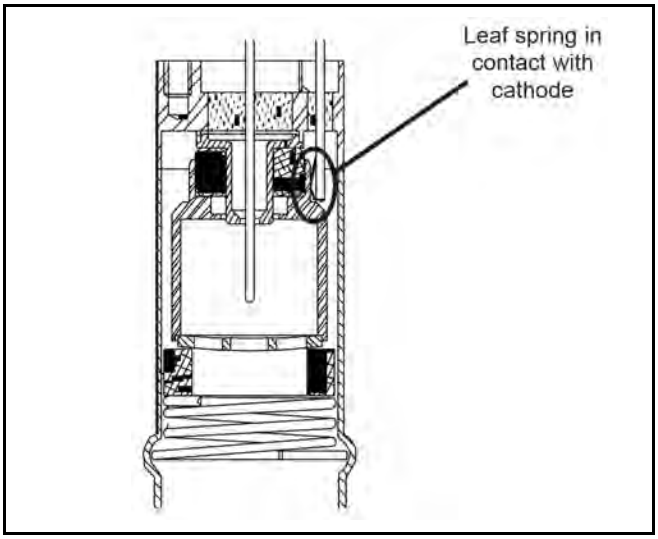

Figure 6-2: Proper Installation of Leaf Spring and Cathode (Step 8)

6.6 Customer Service / Technical Support

Some minor problems are readily corrected on site. If the product requires service, contact the MKS Technical Support Department at +1-833-986-1686. If the product must be returned to the factory for service, request a Return Material Authorization (RMA) from MKS. Do not return products without first obtaining an RMA. In some cases a hazardous materials disclosure form may be required. The MKS Customer Service Representative will advise you if the hazardous materials document is required.

When returning products to MKS, be sure to package the products to prevent shipping damage. Shipping damage on returned products as a result of inadequate packaging is the Buyer's responsibility.

For Customer Service / Technical Support:
MKS Global Headquarters
2 Tech Drive, Suite 201
Andover MA, 01810 USA
Phone: +1-833-986-1686
Email: insidesales@mksinst.com
Visit our website at: www.mksinst.com

6.7 Accessories/ Spare Parts

Table 6-2 Series 943 Spare Parts List

Item	Part #		Item	Part #
Cable for Series 421 Cold Cathode Sensor			**Series 421 Cold Cathode Sensor**	
10 ft (3.0 m)	100006171		KF 25	104210004
25 ft (7.6 m)	100006172		KF 40	104210001
50 ft (15.2m)	100006173		2-3/4″ CF	104210002
100 ft (30.5 m)	100006174		1″ tube	104210003
Custom to 300 ft (91.4 m)	100006175		8 VCR-F (1/2″)	104210005
Cable for Series 423 Cold Cathode Sensor			**Series 423 Cold Cathode Sensor**	
2 ft (3.0 m)	100002505		KF 25	104230004
25 ft (7.6 m)	100007873		KF 40	104230001
50 ft (15.2m)	100007874		2-3/4″ CF	104230002
100 ft (30.5 m)	100002395		1″ tube	104230003
Custom to 300 ft (91.4 m)	100008759		**Internal Rebuild Kit for Series 421 Sensor**	
IgniTorr™ Cold Cathode Sensor Starting Device (for use with CF flange only)			Cathode, Washer, Copper Gasket, Abrasive Paper, plus	
120 V	100006850		(6) ¼-28 Socket Head Cap Screws	100006734
240 V	100007090		(8) 10-32 Socket Head Cap Screws	100006735
Internal Rebuild Kit for Series 423 Sensor			**Power Cord**	103150001
Cathode, Washer, Copper Gasket, Abrasive Paper, plus	100002353		**Mounting Hardware Kit for ¼ DIN**	100005021

Series 943

Cold Cathode Vacuum Sensor System

Customer Service / Technical Support:

MKS Global Headquarters
2 Tech Drive, Suite 201
Andover MA, 01810 USA
Phone: +1-833-986-1686
Email: insidesales@mksinst.com
Visit our website at www.mksinst.com

Instruction Manual

Instruction manual part number 100009887
Revision D - May 2020